TIMKEN

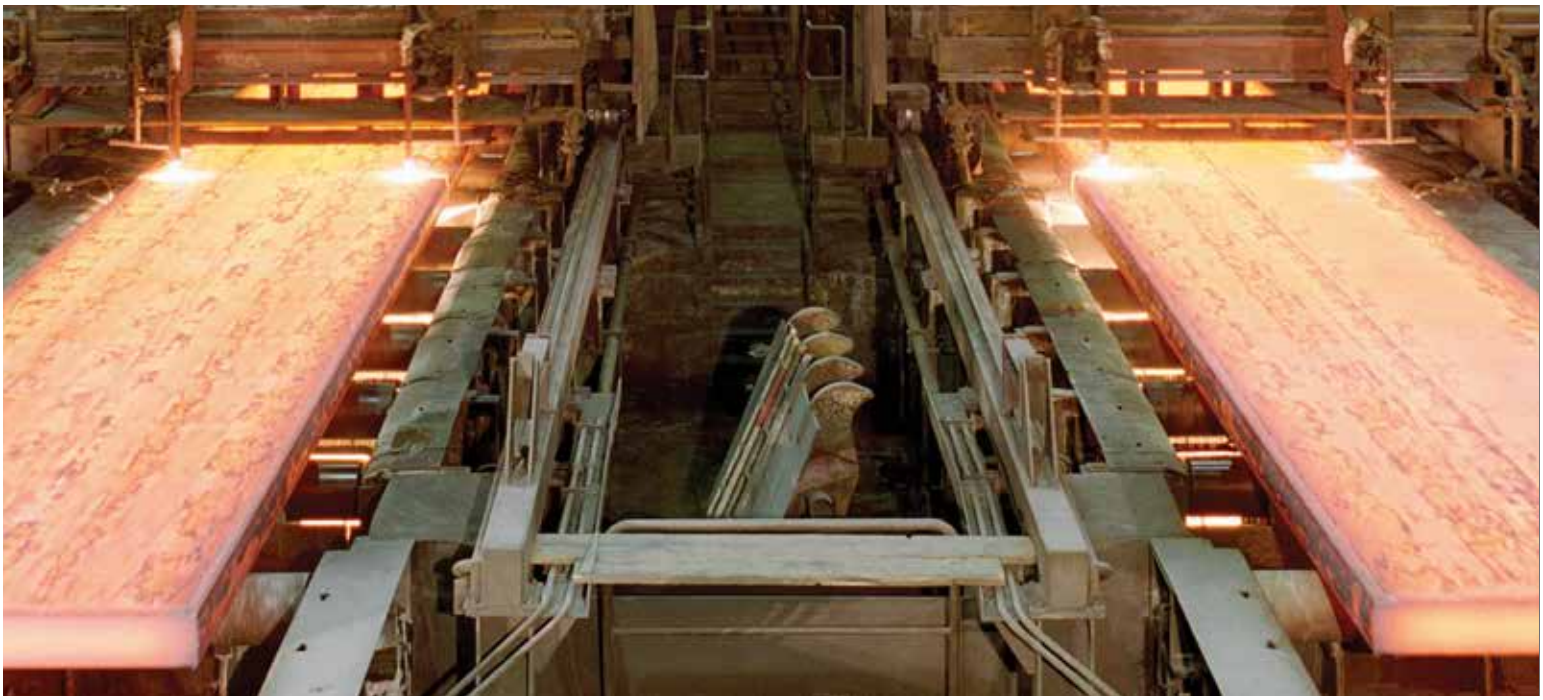

STEEL HOUSING. BETTER SEALING. LONGER LIFE.

TIMKEN® SELF-ALIGNING MOUNTED TAPERED ROLLER BEARINGS

Timken® Self-Aligning mounted tapered roller bearings are designed for applications from aggregate and steel to mining and power generation. The heavy duty housing and cartridge are made from cast steel to stand up to the harshest conditions, and are designed to accept up to +/-4 degrees of misalignment.

The tapered roller bearing yields a design life that is 47%-113% higher than current industry leading competitors. Timken high-performance seals are seven times more effective against water ingress.

Available in two-bolt pillow block sizes 1 3⁄16 - 3 ½ in. (35-90 mm), four-bolt pillow block sizes 2 ¼ - 5 in (60-125 mm) and four-bolt flange sizes 1 3⁄16 - 4 ½ in. (35-115 mm)

BETTER FROM THE INSIDE OUT

- 47%–113% longer life with optimized Timken tapered roller bearings
- Lower bearing operating temperatures
- Improved lube film thickness
- Reduced internal stresses
- Optimized bearing profiles and improved surface finishes
- Cast steel housings accept secondary sealing covers

TIMKEN SELF-ALIGNING MOUNTED TAPERED ROLLER BEARINGS

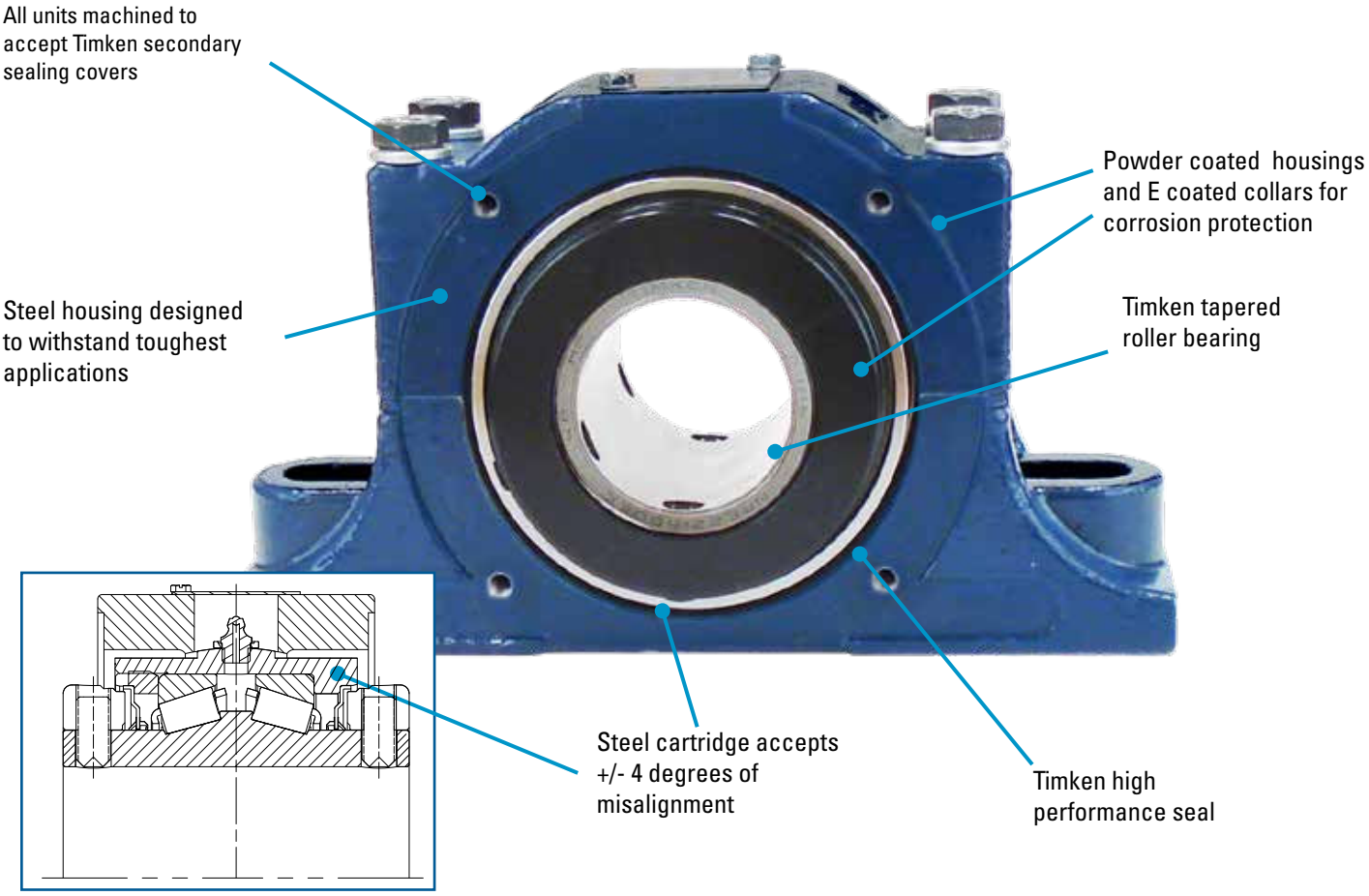

UNRIVALED MULTI-POINT SEALING SYSTEM

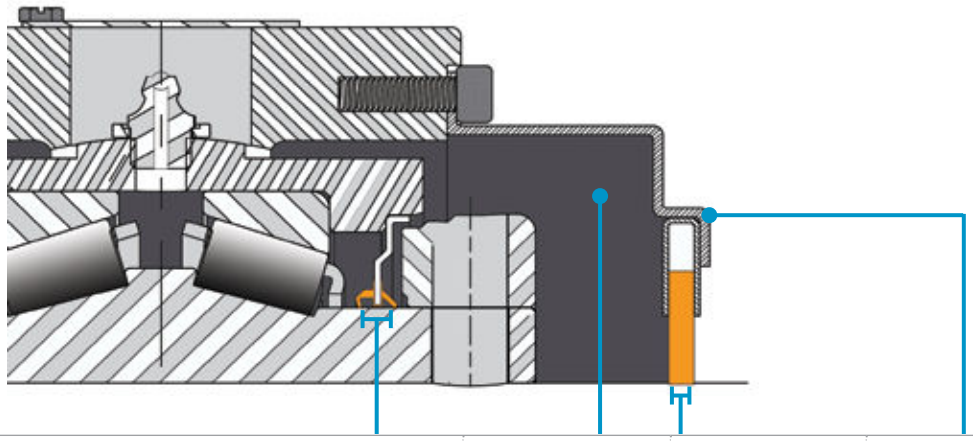

Upgraded triple-barrier internal bearing seal • **Two contact lips and one rigid middle labyrinth section** to help retain grease and reduce contamination ingress • **New enhanced seal material to provide greater performance** with 2X more abrasion resistance than the industry standard nitrile seal	**Full grease pack in cover** (all covers have grease zerks)	**Single lip Teflon through Shaft Seal**	**External through shaft cover** (steel)
3	**1**	**1**	**1**

TIMKEN SELF-ALIGNING MOUNTED TAPERED ROLLER BEARINGS NOMENCLATURE

DOUBLE LOCKING COLLAR NOMENCLATURE

ESA - P2B - TRB - 1 3/16 E

Bearing Style:

ESA	Type E Dimensions
DISA	DI Dimensions
KSA	Type K Dimensions
SAFSA	SAF 500 Dimensions
SNSA	SN 500 Dimensions

Housing Construction Options:

P2B	Pillow block: Two-bolt
P4B	Pillow block: Four-bolt
4BF	Flange block: Four-bolt

Rolling Element:

TRB	Tapered Roller Bearing

Bore Code:		**Bore Size:**
1 3/16	–	1 3/16 in.
2 15/16	–	2 15/16 in.
5	–	5 in.
35MM	–	35 mm
125MM	–	125 mm

Expansion or Non-expansion:

BLANK	(No letter) Non-expansion (fixed)
E	Expansion (floating)

SINGLE LOCKING COLLAR NOMENCLATURE

ESA - P2B - A - TRB - 1 3/16 - E

Bearing Style:

ESA	Type E Dimensions
DISA	DI Dimensions
KSA	Type K Dimensions
SAFSA	SAF 500 Dimensions
SNSA	SN 500 Dimensions

Housing Construction Options:

P2B	Pillow block: Two-bolt
P4B	Pillow block: Four-bolt
4BF	Flange block: Four-bolt

A Single locking collar

Rolling Element:

TRB	Tapered Roller Bearing

Bore Code:		**Bore Size:**
1 3/16	–	1 3/16 in.
2 15/16	–	2 15/16 in.
5	–	5 in.
35MM	–	35 mm
125MM	–	125 mm

Expansion or Non-expansion:

BLANK	(No letter) Non-expansion (fixed)
E	Expansion (floating)

OPEN END COVER NOMENCLATURE

ESA - ST - 1 3/16

Bearing Style:

ESA	ESA Self-Aligning

Cover Options:

ST	Steel Cover - Open

Bore Code:		**Bore Size:**
1 3/16	–	1 3/16 in.
5	–	5 in.

CLOSED END COVER NOMENCLATURE

ESA - SC - A

Bearing Style:

ESA	ESA Self-Aligning

Cover Options:

SC	Steel Cover - Closed

Series Code:

A	1 3/16 - 1 1/4
B	1 3/8 - 1 7/16 (35 mm)
C	1 1/2 - 1 11/16 (40 mm)
D	1 3/4 - 2 (45-50 mm)
E	2 3/16 (55 mm)
F	2 1/4 - 2 1/2 (60-65 mm)
G	2 11/16 - 3 (70-75 mm)
H	3 3/16 - 3 1/2 (80-90 mm)
I	3 15/16 - 4 (100 mm)
J	4 7/16 - 4 1/2 (110-115 mm)
K	4 15/16 - 5 (125 mm)

SELF-ALIGNING TYPE E (ESA) MOUNTED TAPERED ROLLER BEARING PILLOW BLOCK: TWO-BOLT BASE

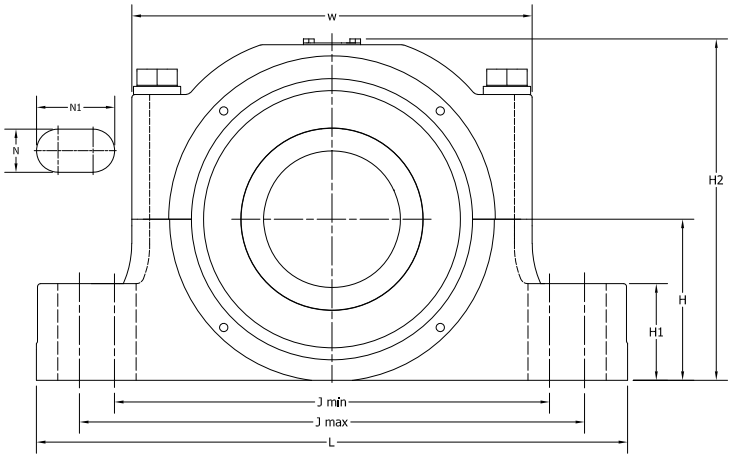

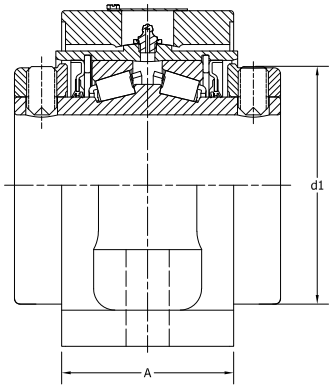

FROM SIZES 1 3/16" – 3"

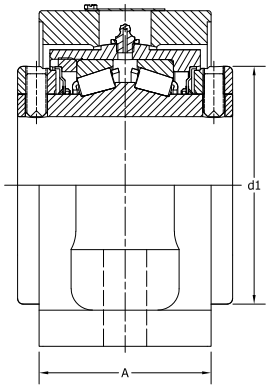

FROM SIZES 3" – 5"

Shaft Dia.	Part No. Non-Expansion	Part No. Expansion	B	L	A	J min.	J max.	Bolt Dia	N	N1	H1	H2	d1	H	W	Expansion	Approx. Wt.
mm in.			**mm** in.	**mm** in.	**mm** in.	**mm** in.	**mm** in.	**mm** in.	**mm** in.	**mm** in.	**mm** in.	**mm** in.	**mm** in.	**mm** in.	**mm** in.	**mm** in.	**kg** lbs.
1 3/16	ESA-P2B-TRB-1 3/16	ESA-P2B-TRB-1 3/16 E	**69.9**	**158.8**	**47.8**	**115.8**	**125.5**	**M12**	**14.2**	**19.1**	**22.4**	**91.3**	**57.2**	**38.1**	**103.1**	**14.2**	**2.9**
1 1/4	ESA-P2B-TRB-1 1/4	ESA-P2B-TRB-1 1/4 E	2 3/4	6 1/4	1 7/8	4 9/16	4 15/16	1/2	9/16	3/4	7/8	3 19/32	2 1/4	1 1/2	4 1/16	9/16	6.4
1 3/8	ESA-P2B-TRB-1 3/8	ESA-P2B-TRB-1 3/8 E															
1 7/16	ESA-P2B-TRB-1 7/16	ESA-P2B-TRB-1 7/16 E	**76.2**	**184.2**	**55.6**	**134.9**	**150.9**	**M12**	**16.0**	**23.9**	**28.7**	**107.7**	**69.9**	**47.8**	**117.6**	**14.2**	**4.7**
35 mm	**ESA-P2B-TRB-35MM**	**ESA-P2B-TRB-35MME**	3	7 1/4	2 3/16	5 5/16	5 15/16	1/2	5/8	15/16	1 1/8	4 1/4	2 3/4	1 7/8	4 5/8	9/16	10.3
1 1/2	ESA-P2B-TRB-1 1/2	ESA-P2B-TRB-1 1/2 E															
1 5/8	ESA-P2B-TRB-1 5/8	ESA-P2B-TRB-1 5/8 E	**85.9**	**196.9**	**60.2**	**141.2**	**163.6**	**M12**	**16.0**	**27.2**	**31.8**	**118.3**	**80.9**	**54.1**	**130.3**	**14.2**	**6.0**
1 11/16	ESA-P2B-TRB-1 11/16	ESA-P2B-TRB-1 11/16 E	3 3/8	7 3/4	2 3/8	5 9/16	6 7/16	1/2	5/8	1 1/16	1 1/4	4 21/32	3 3/16	2 1/8	5 1/8	9/16	13.3
40 mm	**ESA-P2B-TRB-40MM**	**ESA-P2B-TRB-40MME**															
1 3/4	ESA-P2B-TRB-1 3/4	ESA-P2B-TRB-1 3/4 E															
1 7/8	ESA-P2B-TRB-1 7/8	ESA-P2B-TRB-1 7/8 E															
1 15/16	ESA-P2B-TRB-1 15/16	ESA-P2B-TRB-1 15/16 E	**88.9**	**225.6**	**64.3**	**160.3**	**182.6**	**M16**	**19.1**	**30.2**	**33.3**	**126.2**	**87.1**	**57.2**	**141.2**	**14.2**	**7.4**
2	ESA-P2B-TRB-2	ESA-P2B-TRB-2 E	3 1/2	8 7/8	2 17/32	6 5/16	7 3/16	5/8	3/4	1 3/16	1 5/16	4 31/32	3 7/16	2 1/4	5 9/16	9/16	16.4
45 mm	**ESA-P2B-TRB-45MM**	**ESA-P2B-TRB-45MME**															
50 mm	**ESA-P2B-TRB-50MM**	**ESA-P2B-TRB-50MME**															
2 3/16	ESA-P2B-TRB-2 3/16	ESA-P2B-TRB-2 3/16 E	**95.3**	**244.3**	**67.5**	**169.9**	**201.7**	**M16**	**19.3**	**35.1**	**38.1**	**137.3**	**95.0**	**63.5**	**152.4**	**14.2**	**9.0**
55 mm	**ESA-P2B-TRB-55MM**	**ESA-P2B-TRB-55MME**	3 3/4	9 5/8	2 21/32	6 11/16	7 15/16	5/8	3/4	1 3/8	1 1/2	5 13/32	3 3/4	2 1/2	6	9/16	19.8
2 1/4	ESA-P2B-TRB-2 1/4	ESA-P2B-TRB-2 1/4 E															
2 7/16	ESA-P2B-TRB-2 7/16	ESA-P2B-TRB-2 7/16 E															
2 1/2	ESA-P2B-TRB-2 1/2	ESA-P2B-TRB-2 1/2 E	**101.6**	**263.7**	**73.2**	**176.3**	**220.7**	**M16**	**19.3**	**41.4**	**41.4**	**153.7**	**103.2**	**69.9**	**162.7**	**14.2**	**12.0**
60 mm	**ESA-P2B-TRB-60MM**	**ESA-P2B-TRB-60MME**	4	10 3/8	2 7/8	6 15/16	8 11/16	5/8	3/4	1 5/8	1 5/8	6 1/16	4 1/16	2 3/4	6 13/32	9/16	26.4
65 mm	**ESA-P2B-TRB-65MM**	**ESA-P2B-TRB-65MME**															
2 11/16	ESA-P2B-TRB-2 11/16	ESA-P2B-TRB-2 11/16 E															
2 3/4	ESA-P2B-TRB-2 3/4	ESA-P2B-TRB-2 3/4 E															
2 15/16	ESA-P2B-TRB-2 15/16	ESA-P2B-TRB-2 15/16 E	**114.3**	**298.5**	**84.3**	**204.7**	**254.0**	**M20**	**22.4**	**46.8**	**47.8**	**171.2**	**119.9**	**79.5**	**190.5**	**14.2**	**17.1**
3	ESA-P2B-TRB-3	ESA-P2B-TRB-3 E	4 1/2	11 3/4	3 5/16	8 1/16	10	3/4	7/8	1 27/32	1 7/8	6 3/4	4 23/32	3 1/8	7 1/2	9/16	37.6
70 mm	**ESA-P2B-TRB-70MM**	**ESA-P2B-TRB-70MME**															
75 mm	**ESA-P2B-TRB-75MM**	**ESA-P2B-TRB-75MME**															
3 3/16	ESA-P2B-TRB-3 3/16	ESA-P2B-TRB-3 3/16 E															
3 1/4	ESA-P2B-TRB-3 1/4	ESA-P2B-TRB-3 1/4 E															
3 7/16	ESA-P2B-TRB-3 7/16	ESA-P2B-TRB-3 7/16 E															
3 1/2	ESA-P2B-TRB-3 1/2	ESA-P2B-TRB-3 1/2 E	**127.0**	**349.3**	**101.6**	**257.0**	**298.5**	**M24**	**25.7**	**46.2**	**57.2**	**201.7**	**140.5**	**95.3**	**236.5**	**14.2**	**29.9**
80 mm	**ESA-P2B-TRB-80MM**	**ESA-P2B-TRB-80MME**	5	13 3/4	4	10 1/8	11 3/4	7/8	1	1 13/16	2 1/4	7 15/16	5 17/32	3 3/4	9 5/16	9/16	66
85 mm	**ESA-P2B-TRB-85MM**	**ESA-P2B-TRB-85MME**															
90 mm	**ESA-P2B-TRB-90MM**	**ESA-P2B-TRB-90MME**															

SELF-ALIGNING TYPE E (ESA) MOUNTED TAPERED ROLLER BEARING PILLOW BLOCK: FOUR-BOLT BASE

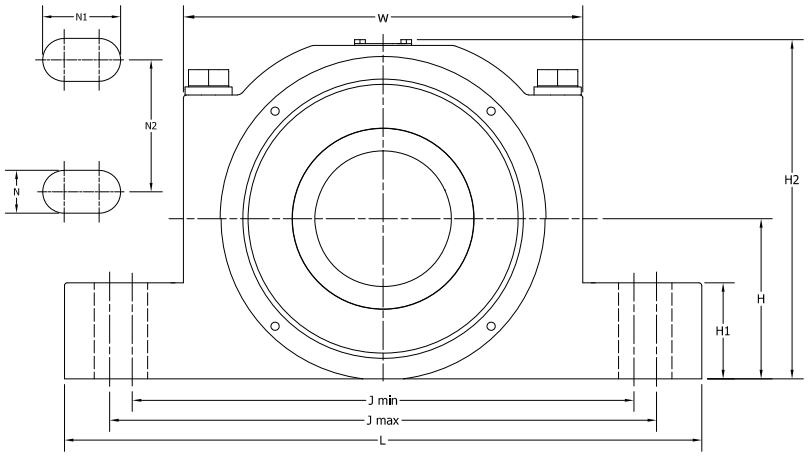

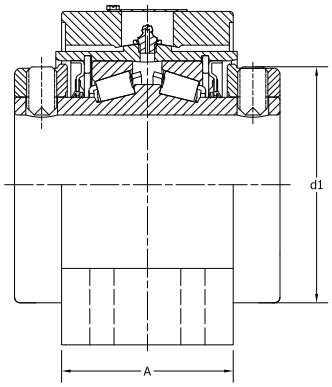

FROM SIZES 1 3/16" – 3"

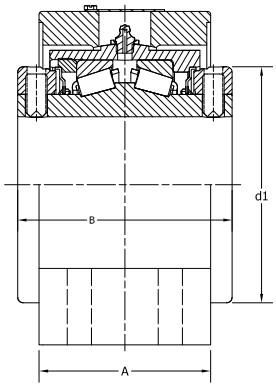

FROM SIZES 3" – 5"

Shaft Dia.	Part No. Non-Expansion	Part No. Expansion	B	L	A	J min.	J max.	Bolt Dia	N	N1	N2	H1	H2	d1	H	W	Expansion	Approx. Wt.
mm in.			**mm** in.	**mm** in.	**mm** in.	**mm** in.	**mm** in.	**mm** in.	**mm** in.	**mm** in.	**mm** in.	**mm** in.	**mm** in.	**mm** in.	**mm** in.	**mm** in.	**mm** in.	**kg** lbs.
2 ¼	ESA-P4B-TRB-2 ¼	ESA-P4B-TRB-2 ¼ E																
2 7/16	ESA-P4B-TRB-2 7/16	ESA-P4B-TRB-2 7/16 E	**101.6**	**263.5**	**88.9**	**196.9**	**222.3**	**M16**	**19.1**	**31.8**	**47.8**	**41.4**	**154.0**	**103.2**	**69.9**	**162.7**	**14.3**	**14.6**
2 ½	ESA-P4B-TRB-2 ½	ESA-P4B-TRB-2 ½ E	4	10 ⅜	3 ½	7 ¾	8 ¾	⅝	¾	1 ¼	1 ⅞	1 ⅝	6 1/16	4 1/16	2 ¾	6 13/32	9/16	32.1
60 mm	**ESA-P4B-TRB-60MM**	**ESA-P4B-TRB-60MME**																
65 mm	**ESA-P4B-TRB-65MM**	**ESA-P4B-TRB-65MME**																
2 11/16	ESA-P4B-TRB-2 11/16	ESA-P4B-TRB-2 11/16 E																
2 ¾	ESA-P4B-TRB-2 ¾	ESA-P4B-TRB-2 ¾ E																
2 15/16	ESA-P4B-TRB-2 15/16	ESA-P4B-TRB-2 15/16 E	**114.3**	**298.5**	**95.3**	**222.3**	**254.0**	**M16**	**19.3**	**35.1**	**53.8**	**47.8**	**171.5**	**119.9**	**79.5**	**190.5**	**14.3**	**19.9**
3	ESA-P4B-TRB-3	ESA-P4B-TRB-3 E	4 ½	11 ¾	3 ¾	8 ¾	10	⅝	¾	1 ⅜	2 ⅛	1 ⅞	6 ¾	4 23/32	3 ⅛	7 ½	9/16	43.8
70 mm	**ESA-P4B-TRB-70MM**	**ESA-P4B-TRB-70MME**																
75 mm	**ESA-P4B-TRB-75MM**	**ESA-P4B-TRB-75MME**																
3 3/16	ESA-P4B-TRB-3 3/16	ESA-P4B-TRB-3 3/16 E																
3 ¼	ESA-P4B-TRB-3 ¼	ESA-P4B-TRB-3 ¼ E																
3 7/16	ESA-P4B-TRB-3 7/16	ESA-P4B-TRB-3 7/16 E																
3 ½	ESA-P4B-TRB-3 ½	ESA-P4B-TRB-3 ½ E	**127.0**	**349.3**	**114.3**	**268.3**	**298.5**	**M20**	**22.2**	**37.3**	**60.5**	**57.2**	**201.6**	**140.5**	**95.3**	**236.5**	**14.3**	**34.3**
80 mm	**ESA-P4B-TRB-80MM**	**ESA-P4B-TRB-80MME**	5	13 ¾	4 ½	10 9/16	11 ¾	¾	⅞	1 15/32	2 ⅜	2 ¼	7 15/16	5 17/32	3 ¾	9 5/16	9/16	75.5
85 mm	**ESA-P4B-TRB-85MM**	**ESA-P4B-TRB-85MME**																
90 mm	**ESA-P4B-TRB-90MM**	**ESA-P4B-TRB-90MME**																
3 15/16	ESA-P4B-TRB-3 15/16	ESA-P4B-TRB-3 15/16 E																
4	ESA-P4B-TRB-4	ESA-P4B-TRB-4E	**158.8**	**387.4**	**120.7**	**279.4**	**330.2**	**M20**	**22.4**	**47.8**	**57.2**	**61.9**	**223.0**	**154.0**	**108.0**	**256.4**	**14.3**	**48.0**
100 mm	**ESA-P4B-TRB-100MM**	**ESA-P4B-TRB-100MME**	6 ¼	15 ¼	4 ¾	11	13	¾	⅞	1 ⅞	2 ¼	2 7/16	8 25/32	6 1/16	4 ¼	10 3/32	9/16	105.7
4 7/16	ESA-P4B-TRB-4 7/16	ESA-P4B-TRB-4 7/16 E																
4 ½	ESA-P4B-TRB-4 ½	ESA-P4B-TRB-4 ½ E	**171.5**	**419.1**	**129.4**	**298.5**	**352.6**	**M20**	**22.4**	**49.2**	**63.5**	**69.9**	**247.7**	**171.1**	**120.7**	**281.8**	**14.3**	**59.2**
110 mm	**ESA-P4B-TRB-110MM**	**ESA-P4B-TRB-110MME**	6 ¾	16 ½	5 3/32	11 ¾	13 ⅞	¾	⅞	1 15/16	2 ½	2 ¾	9 ¾	6 47/64	4 ¾	11 3/32	9/16	130.4
115 mm	**ESA-P4B-TRB-115MM**	**ESA-P4B-TRB-115MME**																
4 15/16	ESA-P4B-TRB-4 15/16	ESA-P4B-TRB-4 15/16 E																
5	ESA-P4B-TRB-5	ESA-P4B-TRB-5 E	**184.2**	**469.9**	**143.7**	**342.9**	**403.4**	**M24**	**26.2**	**56.4**	**73.2**	**76.2**	**288.1**	**196.9**	**139.7**	**323.1**	**14.3**	**86.0**
125 mm	**ESA-P4B-TRB-125MM**	**ESA-P4B-TRB-125MME**	7 ¼	18 ½	5 21/32	13 ½	15 ⅞	⅞	1 1/32	2 7/32	2 ⅞	3	11 11/32	7 ¾	5 ½	12 23/32	9/16	189.5

SELF-ALIGNING TYPE E (ESA) MOUNTED TAPERED ROLLER BEARING: FOUR-BOLT FLANGE BLOCK

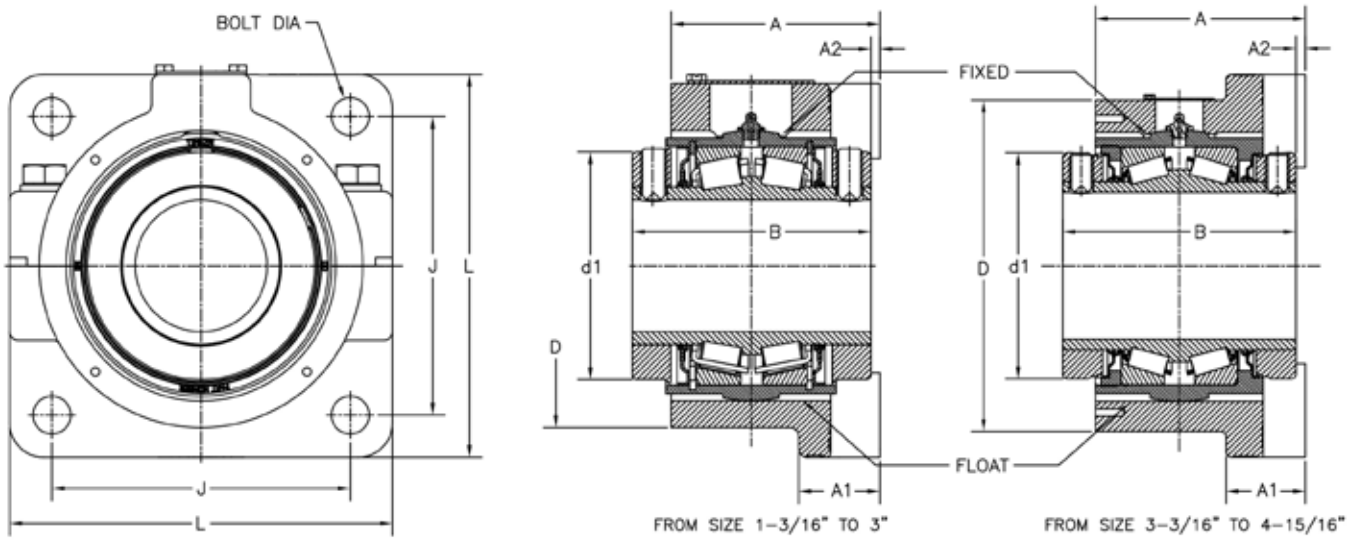

Shaft Dia.	Housing Part No. Non-Expansion	Housing Part No. Expansion	B	L	A	J	A2	Bolt Dia	A1	D	d1	Expansion	Approx. Wt.
mm in.			**mm** in.	**mm** in.	**mm** in.	**mm** in.	**mm** in.	**mm** in.	**mm** in.	**mm** in.	**mm** in.	**mm** in.	**kg** lbs.
1 3/16	ESA-4BF-TRB-1 3/16	ESA-4BF-TRB-1 3/16 E	**69.9** 2 3/4	**101.6** 4	**58.7** 2 5/16	**73.0** 2 7/8	**1.2** 3/64	**1.2** 3/64	**25.4** 1	**88.9** 3 1/2	**57.2** 2 1/4	**14.3** 9/16	**2.6** 5.8
1 1/4	ESA-4BF-TRB-1 1/4	ESA-4BF-TRB-1 1/4 E											
1 3/8	ESA-4BF-TRB-1 3/8	ESA-4BF-TRB-1 3/8 E	**76.2** 3	**117.5** 4 5/8	**65.1** 2 9/16	**88.9** 3 1/2	**1.2** 3/64	**1.2** 3/64	**25.4** 1	**101.6** 4	**69.9** 2 3/4	**14.3** 9/16	**3.7** 8.1
1 7/16	ESA-4BF-TRB-1 7/16	ESA-4BF-TRB-1 7/16 E											
35 mm	**ESA-4BF-TRB-35MM**	**ESA-4BF-TRB-35MME**											
1 1/2	ESA-4BF-TRB-1 1/2	ESA-4BF-TRB-1 1/2 E	**85.9** 3 3/8	**136.5** 5 3/8	**74.6** 2 15/16	**104.8** 4 1/8	**3.2** 1/8	**3.2** 1/8	**30.2** 1 3/16	**121.2** 4 13/16	**80.9** 3 3/16	**14.3** 9/16	**5.8** 12.7
1 5/8	ESA-4BF-TRB-1 5/8	ESA-4BF-TRB-1 5/8 E											
1 11/16	ESA-4BF-TRB-1 11/16	ESA-4BF-TRB-1 11/16 E											
40 mm	**ESA-4BF-TRB-40MM**	**ESA-4BF-TRB-40MME**											
1 3/4	ESA-4BF-TRB-1 3/4	ESA-4BF-TRB-1 3/4 E	**88.9** 3 1/2	**142.9** 5 5/8	**77.8** 3 1/16	**111.1** 4 3/8	**3.2** 1/8	**3.2** 1/8	**30.2** 1 3/16	**120.7** 4 3/4	**87.1** 3 7/16	**14.3** 9/16	**5.9** 13.1
1 7/8	ESA-4BF-TRB-1 7/8	ESA-4BF-TRB-1 7/8 E											
1 15/16	ESA-4BF-TRB-1 15/16	ESA-4BF-TRB-1 15/16 E											
2	ESA-4BF-TRB-2	ESA-4BF-TRB-2 E											
45 mm	**ESA-4BF-TRB-45MM**	**ESA-4BF-TRB-45MME**											
50 mm	**ESA-4BF-TRB-50MM**	**ESA-4BF-TRB-50MME**											
2 3/16	ESA-4BF-TRB-2 3/16	ESA-4BF-TRB-2 3/16 E	**95.3** 3 3/4	**158.8** 6 1/4	**82.6** 3 1/4	**123.8** 4 7/8	**2.4** 3/32	**2.4** 3/32	**34.9** 1 3/8	**133.4** 5 1/4	**95.0** 3 3/4	**14.3** 9/16	**7.8** 17.3
55 mm	**ESA-4BF-TRB-55MM**	**ESA-4BF-TRB-55MME**											
2 1/4	ESA-4BF-TRB-2 1/4	ESA-4BF-TRB-2 1/4 E	**101.6** 4	**174.6** 6 7/8	**90.5** 3 9/16	**136.5** 5 3/8	**4.0** 5/32	**4.0** 5/32	**38.1** 1 1/2	**149.2** 5 7/8	**103.2** 4 1/16	**14.3** 9/16	**10.5** 23.1
2 7/16	ESA-4BF-TRB-2 7/16	ESA-4BF-TRB-2 7/16 E											
2 1/2	ESA-4BF-TRB-2 1/2	ESA-4BF-TRB-2 1/2 E											
60 mm	**ESA-4BF-TRB-60MM**	**ESA-4BF-TRB-60MME**											
65 mm	**ESA-4BF-TRB-65MM**	**ESA-4BF-TRB-65MME**											

SELF-ALIGNING TYPE E (ESA) MOUNTED TAPERED ROLLER BEARING: FOUR-BOLT FLANGE BLOCK

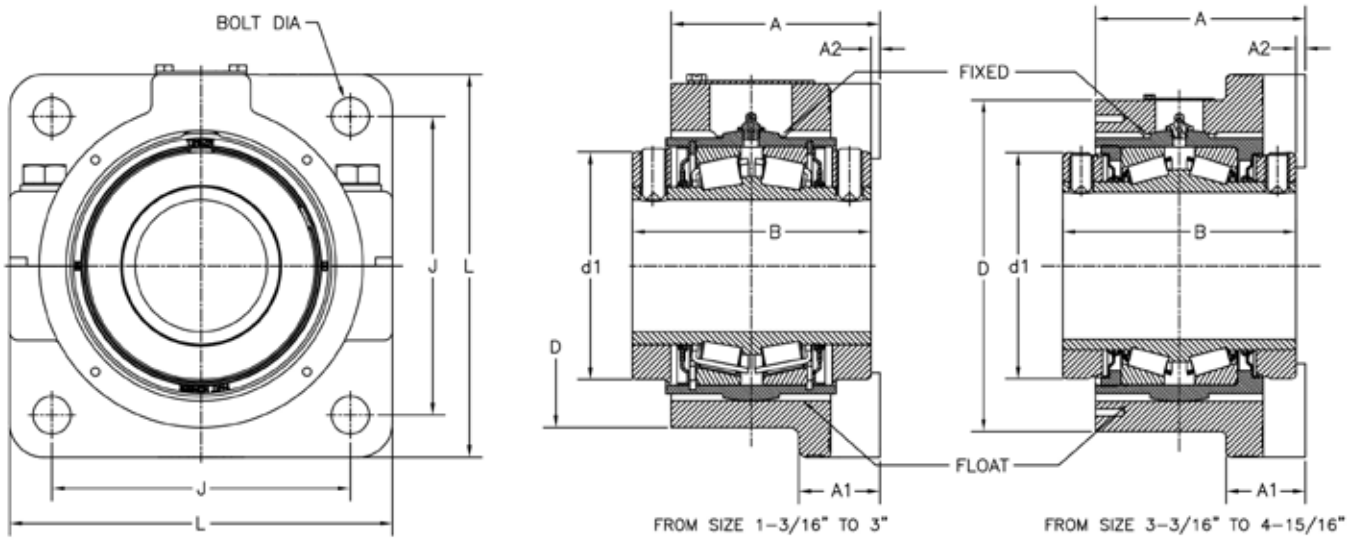

Shaft Dia.	Housing Part No. Non-Expansion	Housing Part No. Expansion	B	L	A	J	A2	Bolt Dia	A1	D	d1	Expansion	Approx. Wt.
mm in.			**mm** in.	**mm** in.	**mm** in.	**mm** in.	**mm** in.	**mm** in.	**mm** in.	**mm** in.	**mm** in.	**mm** in.	**kg** lbs.
2 11/16	ESA-4BF-TRB-2 11/16	ESA-4BF-TRB-2 11/16 E											
2 3/4	ESA-4BF-TRB-2 3/4	ESA-4BF-TRB-2 3/4 E											
2 15/16	ESA-4BF-TRB-2 15/16	ESA-4BF-TRB-2 15/16 E	**114.3** 4 1/2	**196.9** 7 3/4	**100.0** 3 15/16	**152.4** 6	**5.6** 7/32	**5.6** 7/32	**41.3** 1 5/8	**165.1** 6 1/2	**119.9** 4 23/32	**14.3** 9/16	**15.6** 34.5
3	ESA-4BF-TRB-3	ESA-4BF-TRB-3 E											
70 mm	**ESA-4BF-TRB-70MM**	**ESA-4BF-TRB-70MME**											
75 mm	**ESA-4BF-TRB-75MM**	**ESA-4BF-TRB-75MME**											
3 3/16	ESA-4BF-TRB-3 3/16	ESA-4BF-TRB-3 3/16 E											
3 1/4	ESA-4BF-TRB-3 1/4	ESA-4BF-TRB-3 1/4 E											
3 7/16	ESA-4BF-TRB-3 7/16	ESA-4BF-TRB-3 7/16 E											
3 1/2	ESA-4BF-TRB-3 1/2	ESA-4BF-TRB-3 1/2 E	**127.0** 5	**235.0** 9 1/4	**114.3** 4 1/2	**177.8** 7	**6.4** 1/4	**6.4** 1/4	**47.6** 1 7/8	**203.2** 8	**140.5** 5 17/32	**14.3** 9/16	**25.5** 56.3
80 mm	**ESA-4BF-TRB-80MM**	**ESA-4BF-TRB-80MME**											
85 mm	**ESA-4BF-TRB-85MM**	**ESA-4BF-TRB-85MME**											
90 mm	**ESA-4BF-TRB-90MM**	**ESA-4BF-TRB-90MME**											
3 15/16	ESA-4BF-TRB-3 15/16	ESA-4BF-TRB-3 15/16 E											
4	ESA-4BF-TRB-4	ESA-4BF-TRB-4 E	**158.8** 6 1/4	**260.4** 10 1/4	**142.9** 5 5/8	**196.9** 7 3/4	**6.4** 1/4	**6.4** 1/4	**54.0** 2 1/8	**225.4** 8 7/8	**154.0** 6 1/16	**14.3** 9/16	**38.2** 84.2
100 mm	**ESA-4BF-TRB-100MM**	**ESA-4BF-TRB-100MME**											
4 7/16	ESA-4BF-TRB-4 7/16	ESA-4BF-TRB-4 7/16 E											
4 1/2	ESA-4BF-TRB-4 1/2	ESA-4BF-TRB-4 1/2 E	**171.5** 6 3/4	**292.1** 11 1/2	**152.4** 6	**222.3** 8 3/4	**8.3** 21/64	**8.3** 21/64	**66.7** 2 5/8	**247.7** 9 3/4	**171.1** 6 47/64	**14.3** 9/16	**51.6** 113.9
110 mm	**ESA-4BF-TRB-110MM**	**ESA-4BF-TRB-110MME**											
115 mm	**ESA-4BF-TRB-115MM**	**ESA-4BF-TRB-115MME**											

SELF-ALIGNING DI (DISA) MOUNTED TAPERED ROLLER BEARING: TWO-BOLT BASE

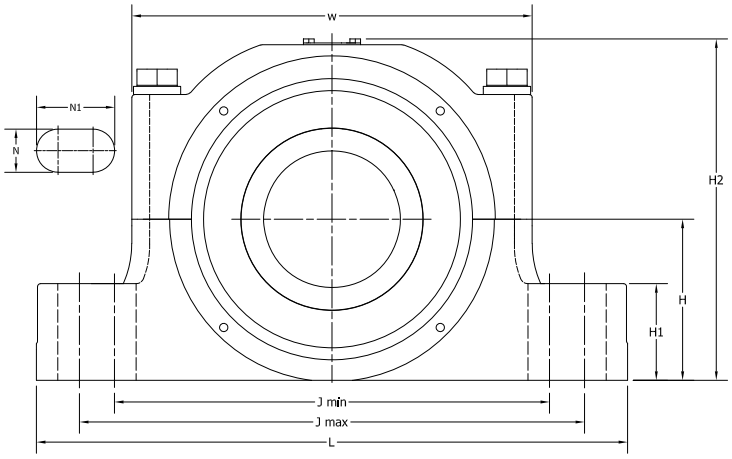

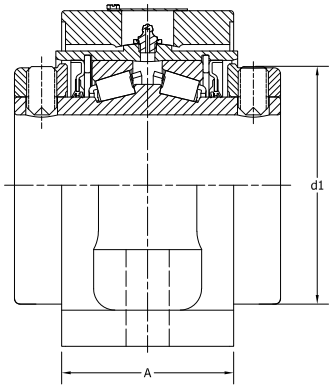

FROM SIZES 1 3/16" – 3"

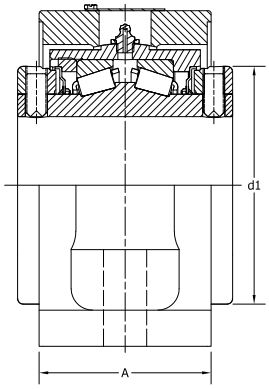

FROM SIZES 3" – 5"

Shaft Dia.	Housing Part No. Non-Expansion	Housing Part No. Expansion	B	L	A	J min.	J max.	Bolt Dia	N	N1	H1	H2	d1	H	W	Expansion	Approx. Wt.
mm in.			**mm** in.	**mm** in.	**mm** in.	**mm** in.	**mm** in.	**mm** in.	**mm** in.	**mm** in.	**mm** in.	**mm** in.	**mm** in.	**mm** in.	**mm** in.	**mm** in.	**kg** lbs.
1 3/16	DISA-P2B-TRB-1 3/16	DISA-P2B-TRB-1 3/16E	**69.9**	**190.5**	**47.8**	**142.9**	**161.9**	**M12**	**13.5**	**23.0**	**22.3**	**103.9**	**57.2**	**54.0**	**103.2**	**14.2**	**2.9**
1 1/4	DISA-P2B-TRB-1 1/4	DISA-P2B-TRB-1 1/4E	2 3/4	7 1/2	1 7/8	5 5/8	6 3/8	1/2	17/32	29/32	7/8	4 3/32	2 1/4	2 1/8	4 1/16	9/16	6.4
1 3/8	DISA-P2B-TRB-1 3/8	DISA-P2B-TRB-1 3/8E	**76.2**	**204.8**	**55.6**	**150.0**	**177.8**	**M12**	**14.3**	**28.2**	**29**	**117.1**	**69.9**	**60.3**	**117.6**	**14.2**	**5.5**
1 7/16	DISA-P2B-TRB-1 7/16	DISA-P2B-TRB-1 7/16E	3	8 1/16	2 3/16	5 29/32	7	1/2	9/16	1 7/64	1 9/64	4 39/64	2 3/4	2 3/8	4 5/8	9/16	12.0
35 MM	**DISA-P2B-TRB-35MM**	**DISA-P2B-TRB-35MME**															
1 1/2	DISA-P2B-TRB-1 1/2	DISA-P2B-TRB-1 1/2E															
1 5/8	DISA-P2B-TRB-1 5/8	DISA-P2B-TRB-1 5/8E	**85.9**	**205.2**	**60.20**	**155.2**	**177.8**	**M12**	**14.3**	**28.2**	**29**	**127.8**	**80.9**	**66.7**	**130.3**	**14.2**	**6.8**
1 11/16	DISA-P2B-TRB-1 11/16	DISA-P2B-TRB-1 11/16E	3 3/8	8 5/64	2 3/8	6 7/64	7	1/2	9/16	1 7/64	1 9/64	5 1/32	3 3/16	2 5/8	5 1/8	9/16	15.1
40MM	**DISA-P2B-TRB-40MM**	**DISA-P2B-TRB-40MME**															
1 3/4	DISA-P2B-TRB-1 3/4	DISA-P2B-TRB-1 3/4E	**88.9**	**254.0**	**64.3**	**160.0**	**214.3**	**M12**	**14.3**	**41.5**	**28.2**	**138.9**	**87.3**	**73.0**	**141.2**	**14.2**	**7.9**
1 7/8	DISA-P2B-TRB-1 7/8	DISA-P2B-TRB-1 7/8E	3 1/2	10	2 17/32	6 9/64	8 7/16	1/2	9/16	1 5/8	1 7/64	5 15/32	3 7/16	2 7/8	5 9/16	9/16	17.5
45MM	**DISA-P2B-TRB-45MM**	**DISA-P2B-TRB-45MME**															
1 15/16	DISA-P2B-TRB-1 15/16	DISA-P2B-TRB-1 15/16E	**88.9**	**254.0**	**64.3**	**165.1**	**221.1**	**M16**	**17.5**	**45.6**	**31.8**	**138.9**	**87.3**	**73.0**	**141.2**	**14.2**	**7.9**
2	DISA-P2B-TRB-2	DISA-P2B-TRB-2E	3 1/2	10	2 17/32	6 1/2	8 45/64	5/8	11/16	1 51/64	1 1/4	5 15/32	3 7/16	2 7/8	5 9/16	9/16	17.5
50MM	**DISA-P2B-TRB-50MM**	**DISA-P2B-TRB-50MME**															
2 3/16	DISA-P2B-TRB-2 3/16	DISA-P2B-TRB-2 3/16E	**95.3**	**273.1**	**67.3**	**177.8**	**241.3**	**M16**	**17.5**	**49.2**	**31.8**	**150.0**	**95.3**	**76.2**	**152.4**	**14.2**	**9.5**
55MM	**DISA-P2B-TRB-55MM**	**DISA-P2B-TRB-55MME**	3 3/4	10 3/4	2 21/32	7	9 1/2	5/8	11/16	1 15/16	1 1/4	5 5/32	3 3/4	3	6	9/16	21.0
2 1/4	DISA-P2B-TRB-2 1/4	DISA-P2B-TRB-2 1/4E															
60MM	**DISA-P2B-TRB-60MM**	**DISA-P2B-TRB-60MME**															
2 7/16	DISA-P2B-TRB-2 7/16	DISA-P2B-TRB-2 7/16E	**101.6**	**304.8**	**73.2**	**200.0**	**260.4**	**M16**	**17.5**	**47.6**	**34.9**	**169.1**	**103.2**	**82.6**	**162.7**	**14.2**	**13.5**
2 1/2	DISA-P2B-TRB-2 1/2	DISA-P2B-TRB-2 1/2E	4	12	2 7/8	7 7/8	10 1/4	5/8	11/16	1 7/8	1 3/8	6 21/32	4 1/16	3 1/4	6 13/32	9/16	29.9
65MM	**DISA-P2B-TRB-65MM**	**DISA-P2B-TRB-65MME**															

SELF-ALIGNING DI (DISA) MOUNTED TAPERED ROLLER BEARING: TWO-BOLT BASE

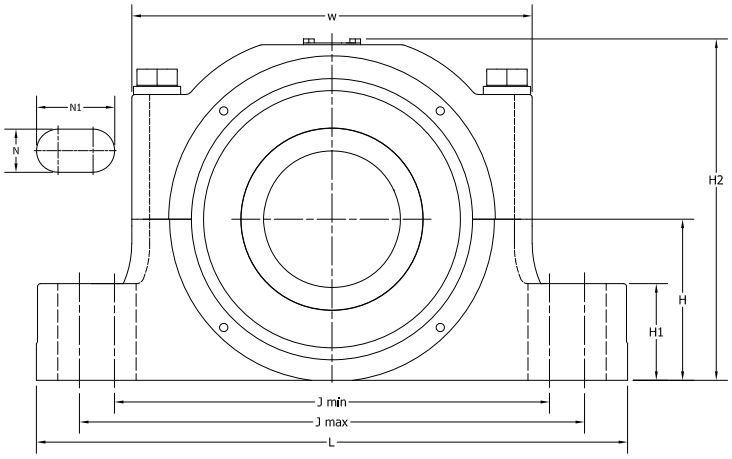

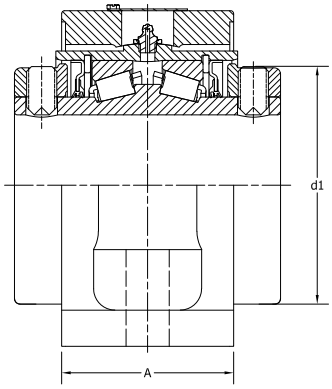

FROM SIZES 1 3/16" – 3"

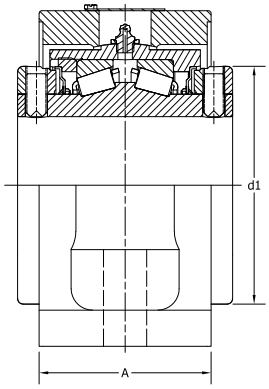

FROM SIZES 3" – 5"

Shaft Dia.	Housing Part No. Non-Expansion	Housing Part No. Expansion	B	L	A	J min.	J max.	Bolt Dia	N	N1	H1	H2	d1	H	W	Expansion	Approx. Wt.
mm			**mm**	**mm**	**mm**	**mm**	**mm**	**mm**	**mm**	**mm**	**mm**	**mm**	**mm**	**mm**	**mm**	**mm**	**kg**
in.			in.	in.	in.	in.	in.	in.	in.	in.	in.	in.	in.	in.	in.	in.	lbs.
2 11/16	DISA-P2B-TRB-2 11/16	DISA-P2B-TRB-2 11/16E															
2 3/4	DISA-P2B-TRB-2 3/4	DISA-P2B-TRB-2 3/4E															
70MM	**DISA-P2B-TRB-70MM**	**DISA-P2B-TRB-70MME**	**114.3**	**341.3**	**84.3**	**241.3**	**292.1**	**M20**	**21.0**	**46.4**	**31.8**	**187.3**	**119.9**	**95.3**	**190.5**	**14.2**	**17.6**
2 15/16	DISA-P2B-TRB-2 15/16	DISA-P2B-TRB-2 15/16E	4 1/2	13 7/16	3 5/16	9 1/2	11 1/2	3/4	53/64	1 53/64	1 1/4	7 3/8	4 23/32	3 3/4	7 1/2	9/16	38.9
3	DISA-P2B-TRB-3	DISA-P2B-TRB-3E															
75MM	**DISA-P2B-TRB-75MM**	**DISA-P2B-TRB-75MME**															
3 3/16	DISA-P2B-TRB-3 3/16	DISA-P2B-TRB-3 3/16E															
3 1/4	DISA-P2B-TRB-3 1/4	DISA-P2B-TRB-3 1/4E															
80MM	**DISA-P2B-TRB-80MM**	**DISA-P2B-TRB-80MME**															
85MM	**DISA-P2B-TRB-85MM**	**DISA-P2B-TRB-85MME**	**127.3**	**406.4**	**101.60**	**276.2**	**350.8**	**M24**	**25.4**	**62.7**	**37.3**	**220.7**	**140.5**	**114.3**	**236.5**	**14.2**	**30.1**
3 7/16	DISA-P2B-TRB-3 7/16	DISA-P2B-TRB-3 7/16E	5	16	4	10 7/8	13 13/16	7/8	1	2 15/32	1 15/32	8 11/16	5 17/32	4 1/2	9 5/16	9/16	66.5
3 1/2	DISA-P2B-TRB-3 1/2	DISA-P2B-TRB-3 1/2E															
90MM	**DISA-P2B-TRB-90MM**	**DISA-P2B-TRB-90MME**															
3 15/16	DISA-P2B-TRB-3 15/16	DISA-P2B-TRB-3 15/16E	**158.8**	**419.1**	**120.7**	**313.9**	**374.7**	**M24**	**25.4**	**55.6**	**50.8**	**238.9**	**154.0**	**127.0**	**256.4**	**14.2**	**32.3**
4	DISA-P2B-TRB-4	DISA-P2B-TRB-4E	6 1/4	16 1/2	4 3/4	12 23/64	14 3/4	7/8	1	2 3/16	2	9 13/32	6 1/16	5	10 3/32	9/16	71.1
100MM	**DISA-P2B-TRB-100MM**	**DISA-P2B-TRB-100MME**															
4 7/16	DISA-P2B-TRB-4 7/16	DISA-P2B-TRB-4 7/16E															
4 1/2	DISA-P2B-TRB-4 1/2	DISA-P2B-TRB-4 1/2E	**171.5**	**466.7**	**129.4**	**362.0**	**412.8**	**M24**	**27.0**	**52.4**	**49.2**	**270.0**	**171.1**	**146.1**	**281.8**	**14.2**	**46.2**
110MM	**DISA-P2B-TRB-110MM**	**DISA-P2B-TRB-110MME**	6 3/4	18 3/8	5 3/32	14 1/4	16 1/4	7/8	1 1/16	2 1/16	1 15/16	10 5/8	6 47/64	5 3/4	11 3/32	9/16	101.9
115MM	**DISA-P2B-TRB-115MM**	**DISA-P2B-TRB-115MM**															
4 15/16	DISA-P2B-TRB-4 15/16	DISA-P2B-TRB-4 15/16E	**184.2**	**520.7**	**143.7**	**384.2**	**458.8**	**M30**	**33.3**	**70.6**	**49.2**	**303.6**	**196.9**	**158.8**	**323.1**	**14.2**	**58.3**
5	DISA-P2B-TRB-5	DISA-P2B-TRB-5E	7 1/4	20 1/2	5 21/32	15 1/8	18 1/16	1 1/4	1 5/16	2 25/32	1 15/16	11 61/64	7 3/4	6 1/4	12 23/32	9/16	128.6
125MM	**DISA-P2B-TRB-125MM**	**DISA-P2B-TRB-125MME**															

SELF-ALIGNING DI (DISA) MOUNTED TAPERED ROLLER BEARING: FOUR-BOLT BASE

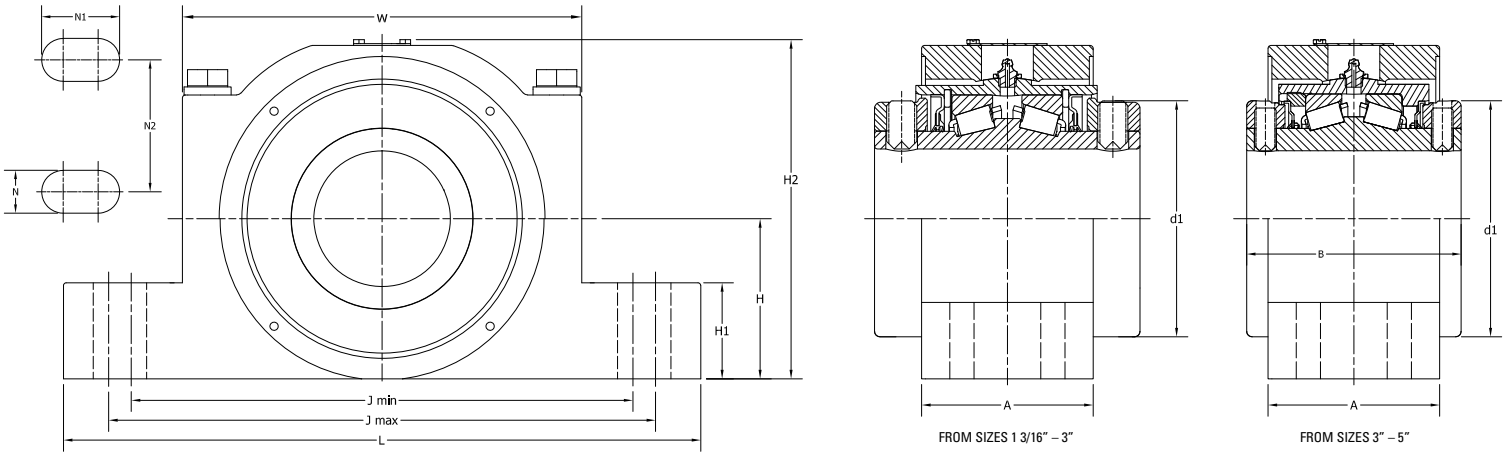

Shaft Dia.	Housing Part No. Non-Expansion	Housing Part No. Expansion	B	L	A	J min.	J max.	Bolt Dia	N	N1	N2	H1	H2	d1	H	W	Expansion	Approx. Wt.
mm in.			**mm** in.	**mm** in.	**mm** in.	**mm** in.	**mm** in.	**mm** in.	**mm** in.	**mm** in.	**mm** in.	**mm** in.	**mm** in.	**mm** in.	**mm** in.	**mm** in.	**mm** in.	**kg** lbs.
2 7/16	DISA-P4B-TRB-2 7/16	DISA-P4B-TRB-2 7/16E	**101.6**	**304.8**	**88.9**	**201.6**	**260.4**	**M16**	**17.5**	**46.9**	**47.6**	**41.3**	**163.1**	**103.1**	**82.6**	**162.8**	**14.2**	**13.7**
2 1/2	DISA-P4B-TRB-2 1/2	DISA-P4B-TRB-2 1/2E	4	12	3 1/2	7 15/16	10 1/4	5/8	11/16	1 27/32	1 7/8	1 5/8	6 27/64	4 1/16	3 1/4	6 13/32	9/16	30.1
65MM	**DISA-P4B-TRB-65MM**	**DISA-P4B-TRB-65MME**																
2 11/16	DISA-P4B-TRB-2 11/16	DISA-P4B-TRB-2 11/16E	**114.3**	**330.2**	**95.3**	**228.6**	**292.1**	**M16**	**17.5**	**49.3**	**54.0**	**47.6**	**183.6**	119.9	**95.3**	**190.5**	**14.2**	**18.3**
2 3/4	DISA-P4B-TRB-2 3/4	DISA-P4B-TRB-2 3/4E	4 1/2	13	3 3/4	9	11 1/2	5/8	11/16	1 15/16	2 1/8	1 7/8	7 15/64	4 23/32	3 3/4	7 1/2	9/16	40.3
70MM	**DISA-P4B-TRB-70MM**	**DISA-P4B-TRB-70MME**																
2 15/16	DISA-P4B-TRB-2 15/16	DISA-P4B-TRB-2 15/16E	**114.3**	**320.7**	**95.3**	**239.7**	**292.1**	**M16**	**17.5**	**43.7**	**54.1**	**47.8**	**183.6**	119.9	**95.3**	**190.5**	**14.2**	**18.3**
3	DISA-P4B-TRB-3	DISA-P4B-TRB-3E	4 1/2	12 5/8	3 3/4	9 7/16	11 1/2	5/8	11/16	1 23/32	2 1/8	1 7/8	7 15/64	4 23/32	3 3/4	7 1/2	9/16	40.3
75MM	**DISA-P4B-TRB-75MM**	**DISA-P4B-TRB-75MME**																
3 7/16	DISA-P4B-TRB-3 7/16	DISA-P4B-TRB-3 7/16E	**127.0**	**381.0**	**114.3**	**276.2**	**339.7**	**M20**	**21.0**	**52.8**	**60.3**	**57.2**	**217.4**	**140.5**	**114.3**	**236.5**	**14.2**	**29.8**
3 1/2	DISA-P4B-TRB-3 1/2	DISA-P4B-TRB-3 1/2E	5	15	4 1/2	10 7/8	13 3/8	3/4	53/64	2 5/64	2 3/8	2 1/4	8 9/16	5 17/32	4 1/2	9 5/16	9/16	65.6
90MM	**DISA-P4B-TRB-90MM**	**DISA-P4B-TRB-90MME**																
3 15/16	DISA-P4B-TRB-3 15/16	DISA-P4B-TRB-3 15/16E	**158.8**	**419.1**	**120.7**	**301.6**	**374.7**	**M20**	**25.4**	**61.9**	**69.9**	**61.9**	**238.9**	**154.0**	**127.0**	**256.4**	**14.2**	**48.4**
4	DISA-P4B-TRB-4	DISA-P4B-TRB-4E	6 1/4	16 1/2	4 3/4	11 7/8	14 3/4	3/4	1	2 7/16	2 3/4	2 7/16	9 13/32	6 1/16	5	10 3/32	9/16	106.7
100MM	**DISA-P4B-TRB-100MM**	**DISA-P4B-TRB-100MME**																
4 7/16	DISA-P4B-TRB-4 7/16	DISA-P4B-TRB-4 7/16E	**171.5**	**466.7**	**129.4**	**362.0**	**412.8**	**M24**	**27.0**	**52.4**	**82.6**	**69.9**	**270.0**	**171.1**	**146.1**	**281.8**	**14.2**	**59.7**
4 1/2	DISA-P4B-TRB-4 1/2	DISA-P4B-TRB-4 1/2E	6 3/4	18 3/8	5 3/32	14 1/4	16 1/4	1	1 1/16	2 1/16	3 1/4	2 3/4	10 5/8	6 47/64	5 3/4	11 3/32	9/16	131.6
115MM	**DISA-P4B-TRB-115MM**	**DISA-P4B-TRB-115MM**																
4 15/16	DISA-P4B-TRB-4 15/16	DISA-P4B-TRB-4 15/16E	184.2	**520.7**	**143.7**	**384.2**	**408.0**	**M24**	**27.0**	**64.3**	**85.7**	**76.2**	**303.5**	**196.9**	**158.8**	**323.1**	**14.2**	**84.1**
5	DISA-P4B-TRB-5	DISA-P4B-TRB-5E	7 1/4	20 1/2	5 21/32	15 1/8	16 1/16	1	1 1/16	2 17/32	3 3/8	3	11 61/64	7 3/4	6 1/4	12 23/32	9/16	185.4
125MM	**DISA-P4B-TRB-125MM**	**DISA-P4B-TRB-125MME**																

TYPE SN 500 SELF-ALIGNING (SNSA) MOUNTED TAPERED ROLLER BEARING: FOUR-BOLT PILLOW BLOCK

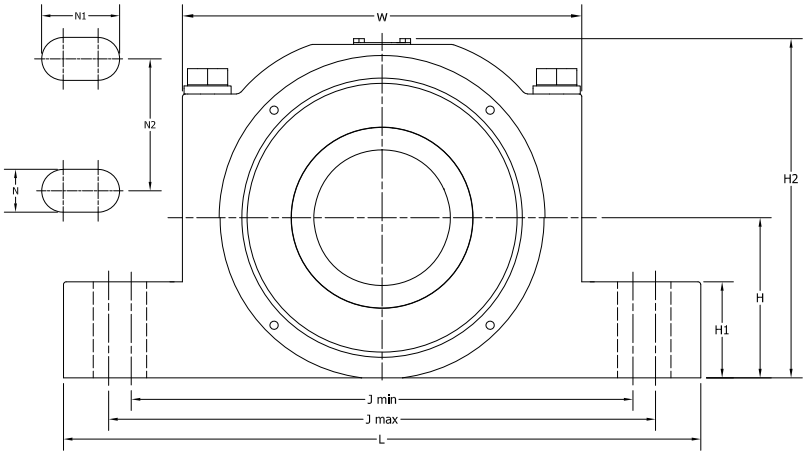

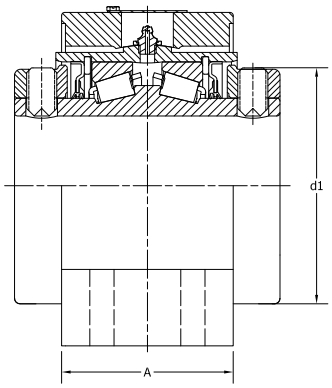

FROM SIZES 1 3/16" – 3"

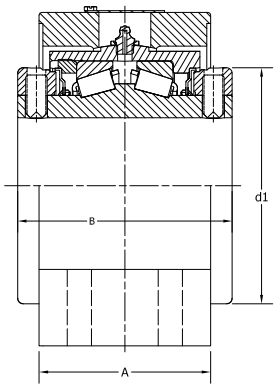

FROM SIZES 3" – 5"

Shaft Dia.	Housing Part No. Non-Expansion	Housing Part No. Expansion	B	L	A	J min.	J max.	Bolt Dia	N	N1	N2	H1	H2	d1	H	W	Expansion	Approx. Wt.
mm in.			**mm** in.	**mm** in.	**mm** in.	**mm** in.	**mm** in.	**mm** in.	**mm** in.	**mm** in.	**mm** in.	**mm** in.	**mm** in.	**mm** in.	**mm** in.	**mm** in.	**mm** in.	**kg** lbs.
2 1/4	SNSA-P4B-TRB-2 1/4	SNSA-P4B-TRB-2 1/4E	**101.6**	**261.9**	**88.9**	**182.6**	**217.5**	**M16**	**17.5**	**34.9**	**47.8**	**41.3**	**160.7**	**103.1**	**80**	**162.7**	**14.2**	**12.8**
60MM	**SNSA-P4B-TRB-60MM**	**SNSA-P4B-TRB-60MME**	4	10 5/16	3 1/2	7 3/16	8 9/16	5/8	11/16	1 3/8	1 7/8	1 5/8	6 21/64	4 1/16	3 5/32	6 13/32	9/16	28.3
2 7/16	SNSA-P4B-TRB-2 7/16	SNSA-P4B-TRB-2 7/16E																
2 1/2	SNSA-P4B-TRB-2 1/2	SNSA-P4B-TRB-2 1/2E	**101.6**	**275.0**	**88.9**	**201.6**	**244.5**	**M16**	**17.5**	**38.9**	**39.6**	**41.3**	**160.7**	**103.1**	**80**	**162.8**	**14.2**	**13.2**
65MM	**SNSA-P4B-TRB-65MM**	**SNSA-P4B-TRB-65MME**	4	10 53/64	3 1/2	7 15/16	9 5/8	5/8	11/16	1 17/32	1 9/16	1 5/8	6 21/64	4 1/16	3 5/32	6 13/32	9/16	29.1
2 11/16	SNSA-P4B-TRB-2 11/16	SNSA-P4B-TRB-2 11/16E																
2 3/4	SNSA-P4B-TRB-2 3/4	SNSA-P4B-TRB-2 3/4E	**114.3**	**330.2**	**95.3**	**228.6**	**292.1**	**M16**	**17.5**	**49.3**	**54.0**	**47.6**	**183.6**	119.9	**95.3**	**190.5**	**14.2**	**17.7**
70MM	**SNSA-P4B-TRB-70MM**	**SNSA-P4B-TRB-70MME**	4 1/2	13	3 3/4	9	11 1/2	5/8	11/16	1 15/16	2 1/8	1 7/8	7 15/64	4 23/32	3 3/4	7 1/2	9/16	39.0
2 15/16	SNSA-P4B-TRB-2 15/16	SNSA-P4B-TRB-2 15/16E																
3	SNSA-P4B-TRB-3	SNSA-P4B-TRB-3E	**114.3**	**320.7**	**95.3**	**239.7**	**287.3**	**M16**	**17.5**	**41.3**	**52.4**	**47.8**	**183.8**	**119.9**	**95**	**190.5**	**14.2**	**18.5**
75MM	**SNSA-P4B-TRB-75MM**	**SNSA-P4B-TRB-75MME**	4 1/2	12 5/8	3 3/4	9 7/16	11 5/16	5/8	11/16	1 5/8	2 1/16	1 7/8	7 15/64	4 23/32	3 3/4	7 1/2	9/16	40.9
3 3/16	SNSA-P4B-TRB-3 3/16	SNSA-P4B-TRB-3 3/16E																
3 1/4	SNSA-P4B-TRB-3 1/4	SNSA-P4B-TRB-3 1/4E	**127.0**	**344.8**	**114.3**	**266.7**	**298.5**	**M20**	**17.5**	**33.3**	**54.1**	**57.2**	**203.1**	**140.5**	**100**	**236.5**	**14.2**	**29.5**
80MM	**SNSA-P4B-TRB-80MM**	**SNSA-P4B-TRB-80MME**	5	13 37/64	4 1/2	10 1/2	11 3/4	5/8	11/16	1 5/16	2 1/8	2 1/4	8	5 17/32	3 15/16	9 5/16	9/16	65.0
85MM	**SNSA-P4B-TRB-85MM**	**SNSA-P4B-TRB-85MME**	**127.0** 5	**345.0** 13 37/64	**114.3** 4 1/2	**282.7** 11 1/8	**298.5** 11 3/4	**M16** 5/8	**17.5** 11/16	**25.4** 1	**50.0** 1 31/32	**57.2** 2 1/4	**215.1** 8 15/32	**140.5** 5 17/32	**112** 4 13/32	**236.5** 9 5/16	**14.2** 9/16	**30.0** 66.2
3 7/16	SNSA-P4B-TRB-3 7/16	SNSA-P4B-TRB-3 7/16E																
3 1/2	SNSA-P4B-TRB-3 1/2	SNSA-P4B-TRB-3 1/2E	**127.0**	**381.0**	**114.3**	**276.2**	**339.7**	**M20**	**21.0**	**52.8**	**60.3**	**57.2**	**215.1**	**140.5**	**112**	**236.5**	**14.2**	**29.3**
90MM	**SNSA-P4B-TRB-90MM**	**SNSA-P4B-TRB-90MME**	5	15	4 1/2	10 7/8	13 3/8	3/4	53/64	2 5/64	2 3/8	2 1/4	8 15/32	5 17/32	4 13/32	9 5/16	9/16	64.6
3 15/16	SNSA-P4B-TRB-3 15/16	SNSA-P4B-TRB-3 15/16E																
4	SNSA-P4B-TRB-4	SNSA-P4B-TRB-4E	**158.8**	**419.1**	**120.7**	**301.6**	**374.7**	**M20**	**25.4**	**61.9**	**69.9**	**61.9**	**236.9**	**154.0**	**125**	**256.4**	**14.2**	**46.6**
100MM	**SNSA-P4B-TRB-100MM**	**SNSA-P4B-TRB-100MME**	6 1/4	16 1/2	4 3/4	11 7/8	14 3/4	3/4	1	2 7/16	2 3/4	2 7/16	9 21/64	6 1/16	4 59/64	10 3/32	9/16	102.8
110MM	**SNSA-P4B-TRB-110MM**	**SNSA-P4B-TRB-110MME**	**171.5** 6 3/4	**410** 16 9/64	**146.1** 5 3/4	**342.9** 13 1/2	**356.0** 14 1/64	**M24** 1	**25.4** 1	**32.0** 1 1/4	**70.2** 2 49/64	**69.9** 2 3/4	**263.9** 10 25/64	**171.1** 6 47/64	**140** 5 33/64	**281.8** 11 3/32	**14.2** 9/16	**55.0** 121.3
4 7/16	SNSA-P4B-TRB-4 7/16	SNSA-P4B-TRB-4 7/16E																
4 1/2	SNSA-P4B-TRB-4 1/2	SNSA-P4B-TRB-4 1/2E	**171.5**	**466.7**	**129.4**	**362.0**	**412.8**	**M24**	**27.0**	**52.4**	**82.6**	**69.9**	**274.2**	**171.1**	**150**	**281.8**	**14.2**	**51.7**
115MM	**SNSA-P4B-TRB-115MM**	**SNSA-P4B-TRB-115MM**	6 3/4	18 3/8	5 3/32	14 1/4	16 1/4	1	1 1/16	2 1/16	3 1/4	2 3/4	10 51/64	6 47/64	5 29/32	11 3/32	9/16	114.0
4 15/16	SNSA-P4B-TRB-4 15/16	SNSA-P4B-TRB-4 15/16E																
5	SNSA-P4B-TRB-5	SNSA-P4B-TRB-5E	**184.2**	**520.7**	**143.7**	**384.2**	**408.0**	**M24**	**27.0**	**64.3**	**85.7**	**76.2**	**294.9**	**196.9**	**150**	**323.1**	**14.2**	**82.7**
125MM	**SNSA-P4B-TRB-125MM**	**SNSA-P4B-TRB-125MME**	7 1/4	20 1/2	5 21/32	15 1/8	16 1/16	1	1 1/16	2 17/32	3 3/8	3	11 39/64	7 3/4	5 29/32	12 23/32	9/16	182.2

TYPE SN 500 SELF-ALIGNING (SNSA) MOUNTED TAPERED ROLLER BEARING: TWO-BOLT PILLOW BLOCK

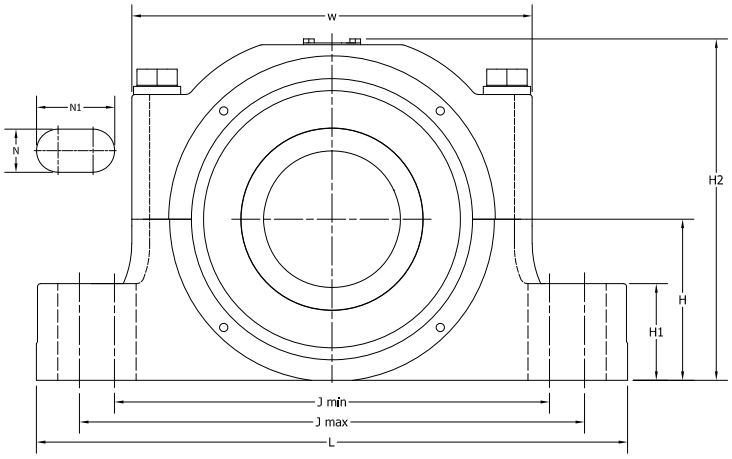

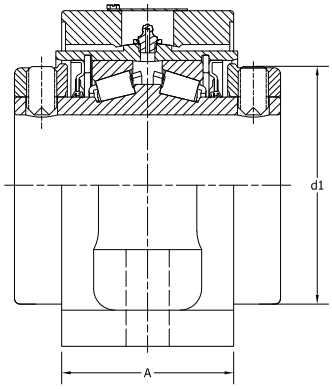

FROM SIZES 1 3/16" – 3"

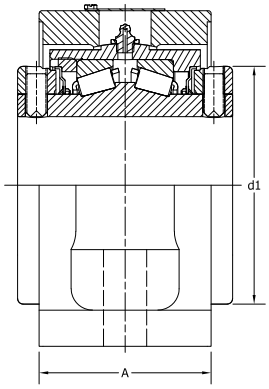

FROM SIZES 3" – 5"

Shaft Dia.	Housing Part No. Non-Expansion	Housing Part No. Expansion	B	L	A	J min.	J max.	Bolt Dia	N	N1	H1	H2	d1	H	W	Expansion	Approx. Wt.
mm in.			**mm** in.	**mm** in.	**mm** in.	**mm** in.	**mm** in.	**mm** in.	**mm** in.	**mm** in.	**mm** in.	**mm** in.	**mm** in.	**mm** in.	**mm** in.	**mm** in.	**kg** lbs.
1 3/16	SNSA-P2B-TRB-1 3/16	SNSA-P2B-TRB-1 3/16E	**69.9**	**190.5**	**47.8**	**142.9**	**161.9**	**M12**	**13.5**	**23.0**	**22.3**	**99.6**	**57.2**	**50.0**	**103.2**	**14.2**	**2.9**
1 1/4	SNSA-P2B-TRB-1 1/4	SNSA-P2B-TRB-1 1/4E	2 3/4	7 1/2	1 7/8	5 5/8	6 3/8	1/2	17/32	29/32	7/8	3 59/64	2 1/4	1 31/32	4 1/16	9/16	6.4
1 3/8	SNSA-P2B-TRB-1 3/8	SNSA-P2B-TRB-1 3/8E	**76.2**	**204.8**	**55.6**	**150.0**	**177.8**	**M12**	**14.3**	**28.2**	**28.6**	**116.8**	**69.9**	**60.0**	**117.6**	**14.2**	**5.4**
1 7/16	SNSA-P2B-TRB-1 7/16	SNSA-P2B-TRB-1 7/16E	3	8 1/16	2 3/16	5 29/32	7	1/2	9/16	1 7/64	1 1/8	4 39/64	2 3/4	2 23/64	4 5/8	9/16	11.8
35 MM	**SNSA-P2B-TRB-35MM**	**SNSA-P2B-TRB-35MME**															
1 1/2	SNSA-P2B-TRB-1 1/2	SNSA-P2B-TRB-1 1/2E															
1 5/8	SNSA-P2B-TRB-1 5/8	SNSA-P2B-TRB-1 5/8E	**85.9**	**205.2**	**60.20**	**155.2**	**177.8**	**M12**	**14.3**	**25.8**	**29**	**121.4**	**80.9**	**60.0**	**130.3**	**14.2**	**6.1**
1 11/16	SNSA-P2B-TRB-1 11/16	SNSA-P2B-TRB-1 11/16E	3 3/8	8 5/64	2 3/8	6 7/64	7	1/2	9/16	1 1/64	1 9/64	4 25/32	3 3/16	2 23/64	5 1/8	9/16	13.4
40MM	**SNSA-P2B-TRB-40MM**	**SNSA-P2B-TRB-40MME**															
1 3/4	SNSA-P2B-TRB-1 3/4	SNSA-P2B-TRB-1 3/4E	**88.9**	**254.0**	**64.3**	**160.0**	**214.3**	**M12**	**14.3**	**41.28**	**8.6**	**125.5**	**87.3**	**60.0**	**141.2**	**14.2**	**6.9**
1 7/8	SNSA-P2B-TRB-1 7/8	SNSA-P2B-TRB-1 7/8E	3 1/2	10	2 17/32	6 9/64	8 7/16	1/2	9/16	1 5/8	1 1/8	5 15/16	3 7/16	2 23/64	5 9/16	9/16	15.2
45MM	**SNSA-P2B-TRB-45MM**	**SNSA-P2B-TRB-45MME**															
1 15/16	SNSA-P2B-TRB-1 15/16	SNSA-P2B-TRB-1 15/16E	**88.9**	**254.0**	**64.3**	**165.1**	**221.1**	**M16**	**17.5**	**45.6**	**31.8**	**135.7**	**87.3**	**70.0**	**141.2**	**14.2**	**7.8**
2	SNSA-P2B-TRB-2	SNSA-P2B-TRB-2E	3 1/2	10	2 17/32	6 1/2	8 45/64	5/8	11/16	1 51/64	1 1/4	5 11/32	3 7/16	2 3/4	5 9/16	9/16	17.2
50MM	**SNSA-P2B-TRB-50MM**	**SNSA-P2B-TRB-50MME**															
55MM	**SNSA-P2B-TRB-55MM**	**SNSA-P2B-TRB-55MME**	**95.3** 3 3/4	**273.1** 10 3/4	**67.3** 2 21/32	**177.8** 7	**241.3** 9 1/2	**M16** 5/8	**17.5** 11/16	**49.2** 1 15/16	**31.8** 1 1/4	**140.1** 5 33/64	**95.3** 3 3/4	**70.0** 2 3/4	**152.4** 6	**14.2** 9/16	**9.2** 20.3
2 3/16	SNSA-P2B-TRB-2 3/16	SNSA-P2B-TRB-2 3/16E	**95.3** 3 3/4	**275.0** 10 53/64	**67.3** 2 21/32	**224.2** 8 53/64	**236.1** 9 19/64	**M16** 5/8	**17.5** 11/16	**49.2** 1 15/16	**34.9** 1 3/8	**150.0** 5 29/32	**95.3** 3 3/4	**80.0** 3 5/32	**152.4** 6	**14.2** 9/16	**9.2** 20.3
2 1/4	SNSA-P2B-TRB-2 1/4	SNSA-P2B-TRB-2 1/4E															
2 7/16	SNSA-P2B-TRB-2 7/16	SNSA-P2B-TRB-2 7/16E															
2 1/2	SNSA-P2B-TRB-2 1/2	SNSA-P2B-TRB-2 1/2E	**101.6**	**275.0**	**73.2**	**183.0**	**244.5**	**M16**	**17.5**	**48.4**	**34.9**	**160.3**	**103.2**	**80.0**	**162.7**	**14.2**	**12.7**
60MM	**SNSA-P2B-TRB-60MM**	**SNSA-P2B-TRB-60MME**	4	10 53/64	2 7/8	7 13/64	9 5/8	5/8	11/16	1 29/32	1 3/8	6 5/16	4 1/16	3 5/32	6 13/32	9/16	27.9
65MM	**SNSA-P2B-TRB-65MM**	**SNSA-P2B-TRB-65MME**															

TYPE SN 500 SELF-ALIGNING (SNSA) MOUNTED TAPERED ROLLER BEARING: TWO-BOLT PILLOW BLOCK

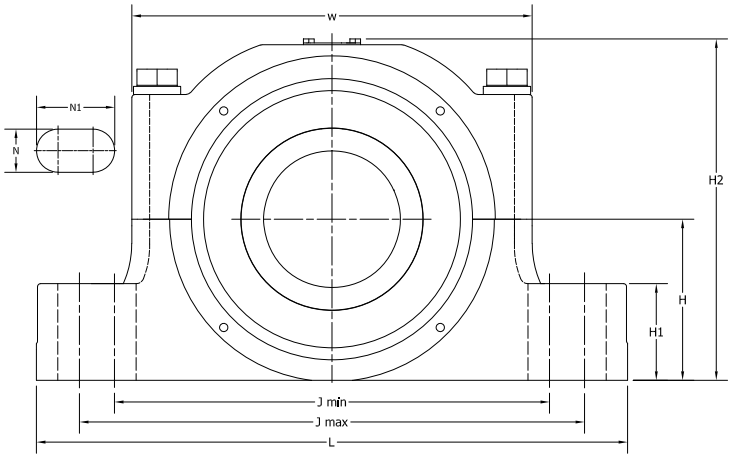

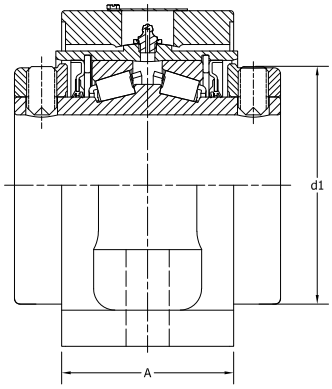

FROM SIZES 1 3/16" – 3"

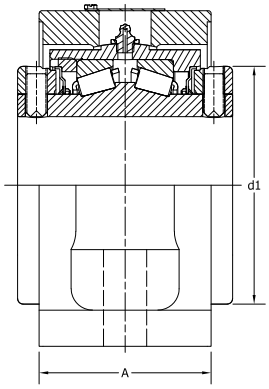

FROM SIZES 3" – 5"

Shaft Dia.	Housing Part No. Non-Expansion	Housing Part No. Expansion	B	L	A	J min.	J max.	Bolt Dia	N	N1	H1	H2	d1	H	W	Expansion	Approx. Wt.
mm in.			**mm** in.	**mm** in.	**mm** in.	**mm** in.	**mm** in.	**mm** in.	**mm** in.	**mm** in.	**mm** in.	**mm** in.	**mm** in.	**mm** in.	**mm** in.	**mm** in.	**kg** lbs.
2 11/16	SNSA-P2B-TRB-2 11/16	SNSA-P2B-TRB-2 11/16E															
2 3/4	SNSA-P2B-TRB-2 3/4	SNSA-P2B-TRB-2 3/4E															
2 15/16	SNSA-P2B-TRB-2 15/16	SNSA-P2B-TRB-2 15/16E	**114.3**	**315.1**	**84.3**	**228.6**	**279.4**	**M20**	**21.0**	**46.4**	**31.8**	**183.8**	**119.9**	**95.0**	**190.5**	**14.2**	**17.5**
3	SNSA-P2B-TRB-3	SNSA-P2B-TRB-3E	4 1/2	12 13/32	3 5/16	9	11	3/4	53/64	1 53/64	1 1/4	7 15/64	4 23/32	3 47/64	7 1/2	9/16	38.6
70MM	**SNSA-P2B-TRB-70MM**	**SNSA-P2B-TRB-70MME**															
75MM	**SNSA-P2B-TRB-75MM**	**SNSA-P2B-TRB-75MME**															
3 3/16	SNSA-P2B-TRB-3 3/16	SNSA-P2B-TRB-3 3/16E	**127.3**	**344.8**	**101.60**	**254.0**	**298.5**	**M20**	**21.0**	**43.3**	**38.9**	**203.1**	**140.5**	**100.0**	**236.5**	**14.2**	**27.4**
3 1/4	SNSA-P2B-TRB-3 1/4	SNSA-P2B-TRB-3 1/4E	5	13 37/64	4	10	11 3/4	3/4	53/64	1 45/64	1 17/32	8	5 17/32	3 15/16	9 5/16	9/16	60.5
80MM	**SNSA-P2B-TRB-80MM**	**SNSA-P2B-TRB-80MME**															
85MM	**SNSA-P2B-TRB-85MM**	**SNSA-P2B-TRB-85MME**	**127.3** 5	**344.8** 13 37/64	**101.60** 4	**254.0** 10	**298.5** 11 3/4	**M20** 3/4	**21.0** 53/64	**43.3** 1 45/64	**38.9** 1 17/32	**215.1** 8 15/32	**140.5** 5 17/32	**112.0** 4 13/32	**236.5** 9 5/16	**14.2** 9/16	**31.3** 69.0
3 7/16	SNSA-P2B-TRB-3 7/16	SNSA-P2B-TRB-3 7/16E	**127.3**	**406.4**	**101.60**	**276.2**	**350.8**	**M24**	**25.4**	**62.7**	**37.3**	**215.1**	**140.5**	**112.0**	**236.5**	**14.2**	**32.4**
3 1/2	SNSA-P2B-TRB-3 1/2	SNSA-P2B-TRB-3 1/2E	5	16	4	10 7/8	13 13/16	7/8	1	2 15/32	1 15/32	8 15/32	5 17/32	4 13/32	9 5/16	9/16	71.4
90MM	**SNSA-P2B-TRB-90MM**	**SNSA-P2B-TRB-90MME**															
3 15/16	SNSA-P2B-TRB-3 15/16	SNSA-P2B-TRB-3 15/16E	**158.8**	**419.1**	**120.7**	**313.9**	**374.7**	**M24**	**25.4**	**55.6**	**50.8**	**236.9**	**154.0**	**125.0**	**256.4**	**14.2**	**47.0**
4	SNSA-P2B-TRB-4	SNSA-P2B-TRB-4E	6 1/4	16 1/2	4 3/4	12 23/64	14 3/4	7/8	1	2 3/16	2 3/16	9 21/64	6 1/16	4 59/64	10 3/32	9/16	103.7
100MM	**SNSA-P2B-TRB-100MM**	**SNSA-P2B-TRB-100MME**															
110MM	**SNSA-P2B-TRB-110MM**	**SNSA-P2B-TRB-110MME**	**171.5** 6 3/4	**410.0** 16 9/64	**129.4** 5 3/32	**313.9** 12 23/64	**356.0** 14 1/64	**M24** 7/8	**25.4** 1 1/16	**46.4** 1 53/64	**50.8** 2 3/16	**263.9** 10 25/64	**171.1** 6 47/64	**140.0** 5 33/64	**281.8** 11 3/32	**14.2** 9/16	**61.0** 134.4
4 7/16	SNSA-P2B-TRB-4 7/16	SNSA-P2B-TRB-4 7/16E	**171.5**	**466.7**	**129.4**	**362.0**	**412.8**	**M24**	**27.0**	**52.4**	**49.2**	**274.2**	**171.1**	**150.0**	**281.8**	**14.2**	**61.2**
4 1/2	SNSA-P2B-TRB-4 1/2	SNSA-P2B-TRB-4 1/2E	6 3/4	18 3/8	5 3/32	14 1/4	16 1/4	7/8	1 1/16	2 1/16	1 15/16	10 51/64	6 47/64	5 29/32	11 3/32	9/16	134.4
115MM	**SNSA-P2B-TRB-115MM**	**SNSA-P2B-TRB-115MM**															
4 15/16	SNSA-P2B-TRB-4 15/16	SNSA-P2B-TRB-4 15/16E	**184.2**	**520.7**	**143.7**	**384.2**	**458.8**	**M30**	**33.3**	**70.6**	**49.2**	**294.8**	**196.9**	**150.0**	**323.1**	**14.2**	**82.6**
5	SNSA-P2B-TRB-5	SNSA-P2B-TRB-5E	7 1/4	20 1/2	5 21/32	15 1/8	18 1/16	1 1/4	1 5/16	2 25/32	1 15/16	11 39/64	7 3/4	5 29/32	12 23/32	9/16	182.2
125MM	**SNSA-P2B-TRB-125MM**	**SNSA-P2B-TRB-125MME**															

SELF-ALIGNING SAF (SAFSA) MOUNTED TAPERED ROLLER BEARING: TWO-BOLT BASE

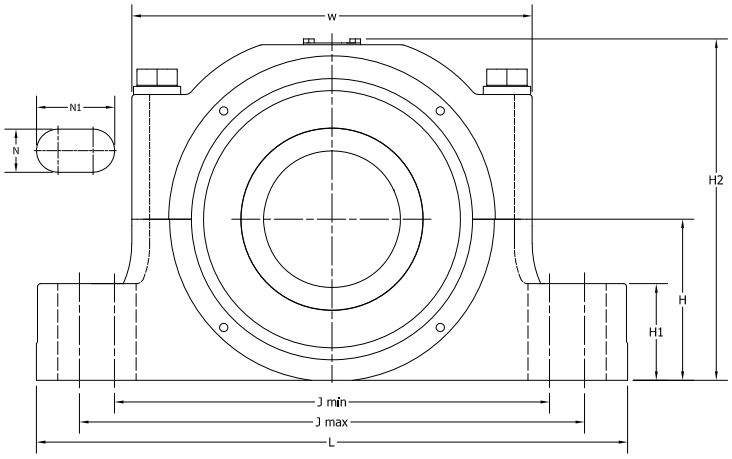

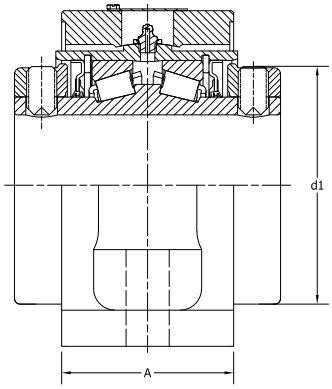

FROM SIZES 1 3/16" – 3"

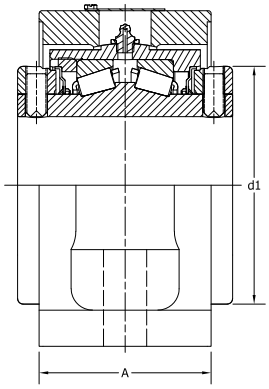

FROM SIZES 3" – 5"

Shaft Dia.	Housing Part No. Non-Expansion	Housing Part No. Expansion	B	L	A	J min.	J max.	Bolt Dia	N	N1	H1	H2	d1	H	W	Expansion	Approx. Wt.
mm in.			**mm** in.	**mm** in.	**mm** in.	**mm** in.	**mm** in.	**mm** in.	**mm** in.	**mm** in.	**mm** in.	**mm** in.	**mm** in.	**mm** in.	**mm** in.	**mm** in.	**kg** lbs.
1 3/16	SAFSA-P2B-TRB-1 3/16	SAFSA-P2B-TRB-1 3/16E	**69.9**	**190.5**	**47.8**	**142.9**	**161.9**	**M12**	**13.5**	**23.0**	**22.3**	**104.0**	**57.2**	**50.8**	**103.2**	**14.2**	**2.9**
1 1/4	SAFSA-P2B-TRB-1 1/4	SAFSA-P2B-TRB-1 1/4E	2 3/4	7 1/2	1 7/8	5 5/8	6 3/8	1/2	17/32	29/32	7/8	4 3/32	2 1/4	2	4 1/16	9/16	6.4
1 3/8	SAFSA-P2B-TRB-1 3/8	SAFSA-P2B-TRB-1 3/8E	**76.2**	**204.8**	**55.6**	**150.0**	**177.8**	**M12**	**14.3**	**28.2**	**28.6**	**117.5**	**69.9**	**57.2**	**117.6**	**14.2**	**5.2**
1 7/16	SAFSA-P2B-TRB-1 7/16	SAFSA-P2B-TRB-1 7/16E	3	8 1/16	2 3/16	5 29/32	7	1/2	9/16	1 7/64	1 1/8	4 5/8	2 3/4	2 1/4	4 5/8	9/16	11.4
35 MM	**SAFSA-P2B-TRB-35MM**	**SAFSA-P2B-TRB-35MME**															
1 1/2	SAFSA-P2B-TRB-1 1/2	SAFSA-P2B-TRB-1 1/2E	**85.9**	**205.2**	**60.2**	**155.2**	**177.8**	**M12**	**14.3**	**25.8**	**29**	**121.4**	**80.9**	**57.2**	**130.3**	**14.2**	**5.3**
1 5/8	SAFSA-P2B-TRB-1 5/8	SAFSA-P2B-TRB-1 5/8E	3 3/8	8 5/64	2 3/8	6 7/64	7	1/2	9/16	1 1/64	1 9/64	4 25/32	3 3/16	2 1/4	5 1/8	9/16	11.7
40MM	**SAFSA-P2B-TRB-40MM**	**SAFSA-P2B-TRB-40MME**															
1 11/16	SAFSA-P2B-TRB-1 11/16	SAFSA-P2B-TRB-1 11/16E	**88.9**	**228.6**	**64.3**	**165.1**	**193.7**	**M12**	**14.3**	**29.0**	**29.0**	**127.8**	**87.3**	**63.5**	**141.2**	**14.2**	**5.7**
			3 1/2	9	2 17/32	6 1/2	7 5/8	1/2	9/16	1 9/64	1 9/64	5 1/32	3 7/16	2 1/2	5 9/16	9/16	12.5
1 3/4	SAFSA-P2B-TRB-1 3/4	SAFSA-P2B-TRB-1 3/4E	**88.9**	**254.0**	**64.3**	**160.0**	**214.3**	**M12**	**14.3**	**41.28**	**28.60**	**127.8**	**87.3**	**63.5**	**141.2**	**14.2**	**6.4**
1 7/8	SAFSA-P2B-TRB-1 7/8	SAFSA-P2B-TRB-1 7/8E	3 1/2	10	2 17/32	6 9/64	8 7/16	1/2	9/16	1 5/8	1 1/8	5 1/32	3 7/16	2 1/2	5 9/16	9/16	14.1
45MM	**SAFSA-P2B-TRB-45MM**	**SAFSA-P2B-TRB-45MME**															
1 15/16	SAFSA-P2B-TRB-1 15/16	SAFSA-P2B-TRB-1 15/16E	**88.9**	**254.0**	**64.3**	**165.1**	**221.1**	**M16**	**17.5**	**45.6**	**31.8**	**137.2**	**87.3**	**69.9**	**141.2**	**14.2**	**7.1**
2	SAFSA-P2B-TRB-2	SAFSA-P2B-TRB-2E	3 1/2	10	2 17/32	6 1/2	8 45/64	5/8	11/16	1 51/64	1 1/4	5 27/64	3 7/16	2 3/4	5 9/16	9/16	15.7
50MM	**SAFSA-P2B-TRB-50MM**	**SAFSA-P2B-TRB-50MME**															
2 3/16	SAFSA-P2B-TRB-2 3/16	SAFSA-P2B-TRB-2 3/16E	**95.3**	**273.1**	**67.3**	**177.8**	**241.3**	**M16**	**17.5**	**49.2**	**31.8**	**150.0**	**95.3**	**76.2**	**152.4**	**14.2**	**7.9**
55MM	**SAFSA-P2B-TRB-55MM**	**SAFSA-P2B-TRB-55MME**	3 3/4	10 3/4	2 21/32	7	9 1/2	5/8	11/16	1 15/16	1 1/4	5 5/32	3 3/4	3	6	9/16	17.5
2 1/4	SAFSA-P2B-TRB-2 1/4	SAFSA-P2B-TRB-2 1/4E	**101.6**	**275.0**	**73.2**	**183.0**	**244.5**	**M16**	**17.5**	**48.4**	**34.9**	**160.3**	**103.2**	**76.2**	**162.7**	**14.2**	**9.4**
60MM	**SAFSA-P2B-TRB-60MM**	**SAFSA-P2B-TRB-60MME**	4	10 53/64	2 7/8	7 13/64	9 5/8	5/8	11/16	1 29/32	1 3/8	6 5/16	4 1/16	3	6 13/32	9/16	20.8
2 7/16	SAFSA-P2B-TRB-2 7/16	SAFSA-P2B-TRB-2 7/16E	**101.6**	**304.8**	**73.2**	**200.0**	**260.4**	**M16**	**17.5**	**47.6**	**34.9**	**169.1**	**103.2**	**82.6**	**162.7**	**14.2**	**10.2**
2 1/2	SAFSA-P2B-TRB-2 1/2	SAFSA-P2B-TRB-2 1/2E	4	12	2 7/8	7 7/8	10 1/4	5/8	11/16	1 7/8	1 3/8	6 21/32	4 1/16	3 1/4	6 13/32	9/16	22.4
65MM	**SAFSA-P2B-TRB-65MM**	**SAFSA-P2B-TRB-65MME**															

SELF-ALIGNING SAF (SAFSA) MOUNTED TAPERED ROLLER BEARING: TWO-BOLT BASE

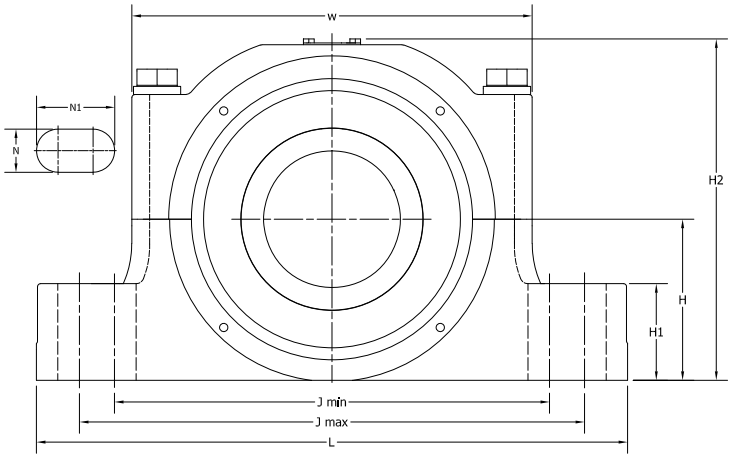

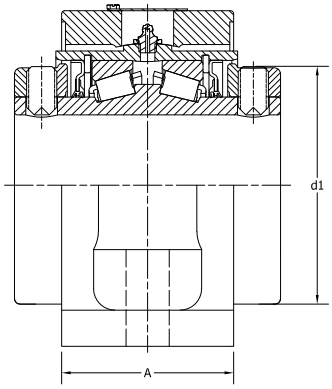

FROM SIZES 1 3/16" – 3"

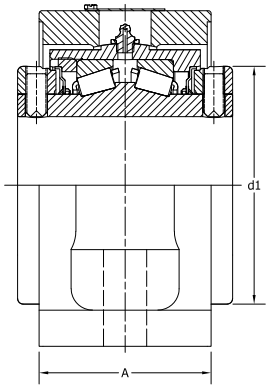

FROM SIZES 3" – 5"

Shaft Dia.	Housing Part No. Non-Expansion	Housing Part No. Expansion	B	L	A	J min.	J max.	Bolt Dia	N	N1	H1	H2	d1	H	W	Expansion	Approx. Wt.
mm in.			**mm** in.	**mm** in.	**mm** in.	**mm** in.	**mm** in.	**mm** in.	**mm** in.	**mm** in.	**mm** in.	**mm** in.	**mm** in.	**mm** in.	**mm** in.	**mm** in.	**kg** lbs.
2 11/16	SAFSA-P2B-TRB-2 11/16	SAFSA-P2B-TRB-2 11/16E	**114.3**	**315.1**	**84.3**	**228.6**	**279.4**	**M20**	**21.0**	**46.4**	**31.8**	**181.0**	**119.9**	**88.9**	**190.5**	**14.2**	**14.0**
2 3/4	SAFSA-P2B-TRB-2 3/4	SAFSA-P2B-TRB-2 3/4E	4 1/2	12 13/32	3 5/16	9	11	3/4	53/64	1 53/64	1 1/4	7 1/8	4 23/32	3 1/2	7 1/2	9/16	30.8
70MM	**SAFSA-P2B-TRB-70MM**	**SAFSA-P2B-TRB-70MME**															
2 15/16	SAFSA-P2B-TRB-2 15/16	SAFSA-P2B-TRB-2 15/16E	**114.3**	**341.3**	**84.3**	**241.3**	**292.1**	**M20**	**21.0**	**46.4**	**31.8**	**187.3**	**119.9**	**95.3**	**190.5**	**14.2**	**14.4**
3	SAFSA-P2B-TRB-3	SAFSA-P2B-TRB-3E	4 1/2	13 7/16	3 5/16	9 1/2	11 1/2	3/4	53/64	1 53/64	1 1/4	7 3/8	4 23/32	3 3/4	7 1/2	9/16	31.6
75MM	**SAFSA-P2B-TRB-75MM**	**SAFSA-P2B-TRB-75MME**															
3 3/16	SAFSA-P2B-TRB-3 3/16	SAFSA-P2B-TRB-3 3/16E															
3 1/4	SAFSA-P2B-TRB-3 1/4	SAFSA-P2B-TRB-3 1/4E	**127.3**	**344.8**	**101.60**	**254.0**	**298.5**	**M20**	**21.0**	**43.3**	**38.9**	**208**	**140.5**	**101.6**	**236.5**	**14.2**	**20.2**
80MM	**SAFSA-P2B-TRB-80MM**	**SAFSA-P2B-TRB-80MME**	5	13 37/64	4	10	11 3/4	3/4	53/64	1 45/64	1 17/32	8 3/16	5 17/32	4	9 5/16	9/16	44.6
85MM	**SAFSA-P2B-TRB-85MM**	**SAFSA-P2B-TRB-85MME**															
3 7/16	SAFSA-P2B-TRB-3 7/16	SAFSA-P2B-TRB-3 7/16E															
3 1/2	SAFSA-P2B-TRB-3 1/2	SAFSA-P2B-TRB-3 1/2E	**127.3**	**406.4**	**101.60**	**276.2**	**350.8**	**M24**	**25.4**	**62.7**	**37.3**	**220.7**	**140.5**	**114.3**	**236.5**	**14.2**	**21.7**
90MM	**SAFSA-P2B-TRB-90MM**	**SAFSA-P2B-TRB-90MME**	5	16	4	10 7/8	13 13/16	7/8	1	2 15/32	1 15/32	8 11/16	5 17/32	4 1/2	9 5/16	9/16	47.9
3 15/16	SAFSA-P2B-TRB-3 15/16	SAFSA-P2B-TRB-3 15/16E															
4	SAFSA-P2B-TRB-4	SAFSA-P2B-TRB-4E	**158.8**	**419.1**	**120.7**	**313.9**	**374.7**	**M24**	**25.4**	**55.6**	**50.8**	**237.3**	**154.0**	**125.4**	**256.4**	**14.2**	**32.3**
100MM	**SAFSA-P2B-TRB-100MM**	**SAFSA-P2B-TRB-100MME**	6 1/4	16 1/2	4 3/4	12 23/64	14 3/4	7/8	1	2 3/16	2	9 11/32	6 1/16	4 15/16	10 3/32	9/16	71.1
4 7/16	SAFSA-P2B-TRB-4 7/16	SAFSA-P2B-TRB-4 7/16E															
4 1/2	SAFSA-P2B-TRB-4 1/2	SAFSA-P2B-TRB-4 1/2E	**171.5**	**466.7**	**129.4**	**362.0**	**412.8**	**M24**	**27.0**	**52.4**	**49.2**	**279.4**	**171.1**	**152.4**	**281.8**	**14.2**	**46.2**
110MM	**SAFSA-P2B-TRB-110MM**	**SAFSA-P2B-TRB-110MME**	6 3/4	18 3/8	5 3/32	14 1/4	16 1/4	7/8	1 1/16	2 1/16	1 15/16	11	6 47/64	6	11 3/32	9/16	101.9
115MM	**SAFSA-P2B-TRB-115MM**	**SAFSA-P2B-TRB-115MM**															
4 15/16	SAFSA-P2B-TRB-4 15/16	SAFSA-P2B-TRB-4 15/16E	**184.2**	**520.7**	**143.7**	**384.2**	**458.8**	**M30**	**33.3**	**70.6**	**49.2**	**300.8**	**196.9**	**152.4**	**323.1**	**14.2**	**58.3**
5	SAFSA-P2B-TRB-5	SAFSA-P2B-TRB-5E	7 1/4	20 1/2	5 21/32	15 1/8	18 1/16	1 1/4	1 5/16	2 25/32	1 15/16	11 27/32	7 3/4	6	12 23/32	9/16	128.6
125MM	**SAFSA-P2B-TRB-125MM**	**SAFSA-P2B-TRB-125MME**															

SELF-ALIGNING SAF (SAFSA) MOUNTED TAPERED ROLLER BEARING: FOUR-BOLT BASE

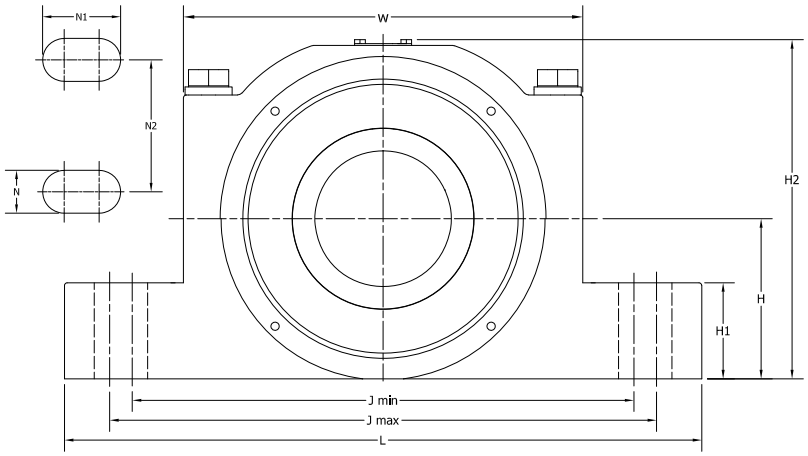

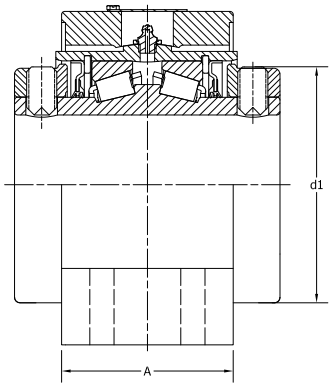

FROM SIZES 1 3/16" – 3"

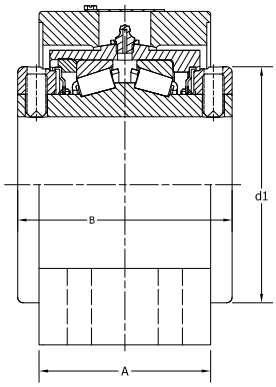

FROM SIZES 3" – 5"

Shaft Dia.	Housing Part No. Non-Expansion	Housing Part No. Expansion	B	L	A	J min.	J max.	Bolt Dia	N	N1	N2	H1	H2	d1	H	W	Expansion	Approx. Wt.
mm in.			**mm** in.	**mm** in.	**mm** in.	**mm** in.	**mm** in.	**mm** in.	**mm** in.	**mm** in.	**mm** in.	**mm** in.	**mm** in.	**mm** in.	**mm** in.	**mm** in.	**mm** in.	**kg** lbs.
2 1/4	SAFSA-P4B-TRB-2 1/4	SAFSA-P4B-TRB-2 1/4E	**101.6**	**261.9**	**88.9**	**182.6**	**217.5**	**M16**	**17.5**	**34.9**	**47.6**	**41.3**	**156.8**	**103.2**	**76.2**	**162.7**	**14.2**	**10.5**
60MM	**SAFSA-P4B-TRB-60MM**	**SAFSA-P4B-TRB-60MME**	4	10 5/16	3 1/2	7 3/16	8 9/16	5/8	11/16	1 3/8	1 7/8	1 5/8	6 11/64	4 1/16	3	6 13/32	9/16	23.1
2 7/16	SAFSA-P4B-TRB-2 7/16	SAFSA-P4B-TRB-2 7/16E																
2 1/2	SAFSA-P4B-TRB-2 1/2	SAFSA-P4B-TRB-2 1/2E	**101.6**	**304.8**	**88.9**	**201.6**	**260.4**	**M16**	**17.5**	**46.9**	**47.6**	**41.3**	**163.1**	**103.1**	**82.6**	**162.8**	**14.2**	**11.2**
65MM	**SAFSA-P4B-TRB-65MM**	**SAFSA-P4B-TRB-65MME**	4	12	3 1/2	7 15/16	10 1/4	5/8	11/16	1 27/32	1 7/8	1 5/8	6 27/64	4 1/16	3 1/4	6 13/32	9/16	24.6
2 11/16	SAFSA-P4B-TRB-2 11/16	SAFSA-P4B-TRB-2 11/16E																
2 3/4	SAFSA-P4B-TRB-2 3/4	SAFSA-P4B-TRB-2 3/4E	**114.3**	**330.2**	**95.3**	**228.6**	**292.1**	**M16**	**17.5**	**49.3**	**54.0**	**47.6**	**177.4**	**119.9**	**88.9**	**190.5**	**14.2**	**15.0**
70MM	**SAFSA-P4B-TRB-70MM**	**SAFSA-P4B-TRB-70MME**	4 1/2	13	3 3/4	9	11 1/2	5/8	11/16	1 15/16	2 1/8	1 7/8	6 63/64	4 23/32	3 1/2	7 1/2	9/16	33.1
2 15/16	SAFSA-P4B-TRB-2 15/16	SAFSA-P4B-TRB-2 15/16E																
3	SAFSA-P4B-TRB-3	SAFSA-P4B-TRB-3E	**114.3**	**320.7**	**95.3**	**239.7**	**292.1**	**M16**	17.5	**43.7**	**54.1**	**47.8**	**183.6**	**119.9**	**95.3**	**190.5**	**14.2**	**16.0**
75MM	**SAFSA-P4B-TRB-75MM**	**SAFSA-P4B-TRB-75MME**	4 1/2	12 5/8	3 3/4	9 7/16	11 1/2	5/8	11/16	1 23/32	2 1/8	1 7/8	7 15/64	4 23/32	3 3/4	7 1/2	9/16	34.6
3 3/16	SAFSA-P4B-TRB-3 3/16	SAFSA-P4B-TRB-3 3/16E																
3 1/4	SAFSA-P4B-TRB-3 1/4	SAFSA-P4B-TRB-3 1/4E	**127.0**	**344.8**	**114.3**	**266.7**	**298.5**	**M20**	**17.5**	**33.3**	**54.1**	**57.2**	**204.7**	**140.5**	**101.6**	**236.5**	**14.2**	**22.3**
80MM	**SAFSA-P4B-TRB-80MM**	**SAFSA-P4B-TRB-80MME**	5	13 37/64	4 1/2	10 1/2	11 3/4	5/8	11/16	1 5/16	2 1/8	2 1/4	8 1/16	5 17/32	4	9 5/16	9/16	49.1
3 7/16	SAFSA-P4B-TRB-3 7/16	SAFSA-P4B-TRB-3 7/16E																
3 1/2	SAFSA-P4B-TRB-3 1/2	SAFSA-P4B-TRB-3 1/2E	**127.0**	**381.0**	**114.3**	**276.2**	**339.7**	**M20**	**21.0**	**52.8**	**60.3**	**57.2**	**217.4**	**140.5**	**114.3**	**236.5**	**14.2**	**24.1**
90MM	**SAFSA-P4B-TRB-90MM**	**SAFSA-P4B-TRB-90MME**	5	15	4 1/2	10 7/8	13 3/8	3/4	53/64	2 5/64	2 3/8	2 1/4	8 9/16	5 17/32	4 1/2	9 5/16	9/16	53.2
3 15/16	SAFSA-P4B-TRB-3 15/16	SAFSA-P4B-TRB-3 15/16E																
4	SAFSA-P4B-TRB-4	SAFSA-P4B-TRB-4E	**158.8**	**419.1**	**120.7**	**301.6**	**374.7**	**M20**	**25.4**	**61.9**	**69.9**	**61.9**	**237.2**	**154.0**	**125.4**	**256.4**	**14.2**	**34.0**
100MM	**SAFSA-P4B-TRB-100MM**	**SAFSA-P4B-TRB-100MME**	6 1/4	16 1/2	4 3/4	11 7/8	14 3/4	3/4	1	2 7/16	2 3/4	2 7/16	9 11/32	6 1/16	4 15/16	10 3/32	9/16	74.8
4 7/16	SAFSA-P4B-TRB-4 7/16	SAFSA-P4B-TRB-4 7/16E																
4 1/2	SAFSA-P4B-TRB-4 1/2	SAFSA-P4B-TRB-4 1/2E	**171.5**	**466.7**	**129.4**	**362.0**	**412.8**	**M24**	**27.0**	**52.4**	**82.6**	**69.9**	**276.2**	**171.1**	**152.4**	**281.8**	**14.2**	**44.9**
115MM	**SAFSA-P4B-TRB-115MM**	**SAFSA-P4B-TRB-115MM**	6 3/4	18 3/8	5 3/32	14 1/4	16 1/4	1	1 1/16	2 1/16	3 1/4	2 3/4	10 7/8	6 47/64	6	11 3/32	9/16	99.0

SELF-ALIGNING SAF (SAFSA) MOUNTED TAPERED ROLLER BEARING: FOUR-BOLT BASE

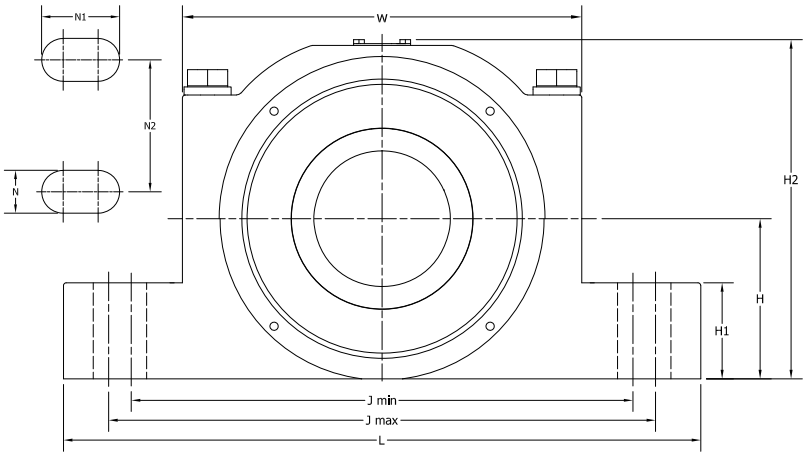

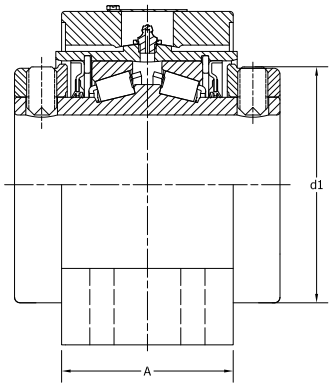

FROM SIZES 1 3/16" – 3"

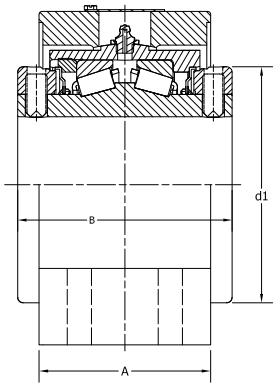

FROM SIZES 3" – 5"

Shaft Dia.	Housing Part No. Non-Expansion	Housing Part No. Expansion	B	L	A	J min.	J max.	Bolt Dia	N	N1	N2	H1	H2	d1	H	W	Expansion	Approx. Wt.
mm in.			**mm** in.	**mm** in.	**mm** in.	**mm** in.	**mm** in.	**mm** in.	**mm** in.	**mm** in.	**mm** in.	**mm** in.	**mm** in.	**mm** in.	**mm** in.	**mm** in.	**mm** in.	**kg** lbs.
4 15/16	SAFSA-P4B-TRB-4 15/16	SAFSA-P4B-TRB-4 15/16E	**184.2**	**520.7**	**143.7**	**384.2**	**408.0**	**M24**	**27.0**	**64.3**	**85.7**	**76.2**	**297.2**	**196.9**	**152.4**	**323.1**	**14.2**	**58.7**
5	SAFSA-P4B-TRB-5	SAFSA-P4B-TRB-5E	7 1/4	20 1/2	5 21/32	15 1/8	16 1/16	1	1 1/16	2 17/32	3 3/8	3	11 45/64	7 3/4	6	12 23/32	9/16	129.4
125MM	**SAFSA-P4B-TRB-125MM**	**SAFSA-P4B-TRB-125MME**																
135MM	**SAFSA-P4B-TRB-135MM**	**SAFSA-P4B-TRB-135MME**	**228.6** 9	**539.8** 21 1/4	**160.0** 6 19/64	**431.8** 17	**489.0** 19 1/4	**M24** 1	**27.0** 1 1/16	**55.6** 2 3/16	**95.3** 3 3/4	**73.0** 2 7/8	**344.7** 13 37/64	**238.1** 9 3/8	**160.3** 6 5/16	**384.3** 15 1/8	**14.2** 9/16	**140.6** 310
5 7/16	SAFSA-P4B-TRB-5 7/16	SAFSA-P4B-TRB-5 7/16E	**228.6** 9	**539.8** 21 1/4	**160.0** 6 19/64	**431.8** 17	**489.0** 19 1/4	**M24** 1	**27.0** 1 1/16	**55.6** 2 3/16	**95.3** 3 3/4	**82.6** 3 1/4	**354.7** 13 31/32	**238.1** 9 3/8	**169.9** 6 11/16	**384.3** 15 1/8	**14.2** 9/16	**144.2** 318
5 1/2	SAFSA-P4B-TRB-5 1/2	SAFSA-P4B-TRB-5 1/2E																
140MM	**SAFSA-P4B-TRB-140MM**	**SAFSA-P4B-TRB-140MM**																
150MM	**SAFSA-P4B-TRB-150MM**	**SAFSA-P4B-TRB-150MME**	**228.6** 9	**628.6** 24 3/4	**171.5** 6 3/4	**482.6** 19	**549.3** 21 5/8	**M24** 1	**28.6** 1 1/8	**62.0** 2 7/16	**108.0** 4 1/4	**82.6** 3 1/4	**364.2** 14 11/32	**238.1** 9 3/8	**179.3** 7 1/16	**384.3** 15 1/8	**14.2** 9/16	**155.6** 343
5 15/16	SAFSA-P4B-TRB-5 15/16	SAFSA-P4B-TRB-5 15/16E																
6	SAFSA-P4B-TRB-6	SAFSA-P4B-TRB-6E																
6 7/16	SAFSA-P4B-TRB-6 7/16	SAFSA-P4B-TRB-6 7/16E	**266.7** 10 1/2	**679.5** 26 3/4	**181.1** 7 1/8	**530.2** 20 7/8	**287.3** 23 5/8	**M24** 1	**28.6** 1 1/8	**63.5** 2 1/2	**117.5** 4 5/8	**88.9** 3 1/2	**405.6** 15 31/32	**290.5** 11 7/16	**95.3** 7 1/2	**465.1** 18 5/16	**14.2** 9/16	**250.4** 552
6 1/2	SAFSA-P4B-TRB-6 1/2	SAFSA-P4B-TRB-6 1/2E																
170MM	**SAFSA-P4B-TRB-170MM**	**SAFSA-P4B-TRB-170MME**																
6 15/16	SAFSA-P4B-TRB-6 15/16	SAFSA-P4B-TRB-6 15/16E	**266.7** 10 1/2	**711.2** 28	**181.1** 7 1/8	**549.3** 21 5/8	**619.1** 24 3/8	**M30** 1 1/4	**34.9** 1 3/8	**69.9** 2 3/4	**114.3** 4 1/2	**88.9** 3 1/2	**415.3** 16 23/64	**290.5** 11 7/16	**200.0** 7 7/8	**465.1** 18 5/16	**14.2** 9/16	**252.2** 556
7	SAFSA-P4B-TRB-7	SAFSA-P4B-TRB-7E																
180MM	**SAFSA-P4B-TRB-180MM**	**SAFSA-P4B-TRB-180MME**	**266.7** 10 1/2	**749.3** 29 1/2	**181.1** 7 1/8	**571.5** 22 1/2	**635.0** 25	**M30** 1 1/4	**34.9** 1 3/8	**52.8** 2 5/8	**127.0** 5	**88.9** 3 1/2	**424.7** 16 23/32	**290.5** 11 7/16	**209.6** 8 1/4	**465.1** 18 5/16	**14.2** 9/16	**250.4** 552

SELF ALIGNING SECONDARY COVERS

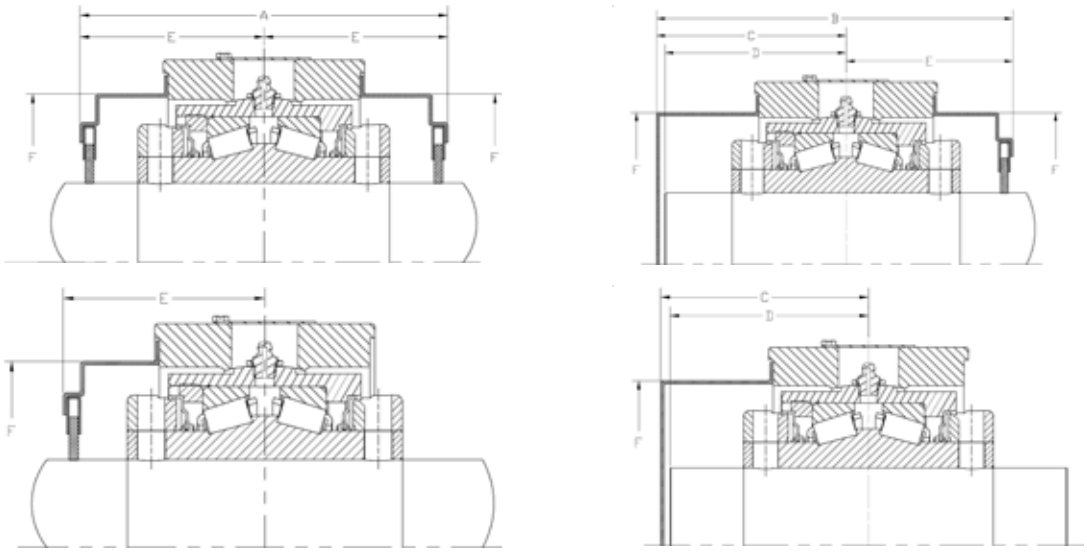

Cover Part Number	Shaft Dia.	Steel Cover Dimension					
		A	B	C	D	E	F
ESASC-A	Closed	**112.9**	**121.9**	**65.5**	**61.8**	**56.5**	**74.7**
ESAST-1 3/16	1 3/16	4 7/16	4 13/16	2 19/32	2 13/32	2 7/32	2 15/16
ESAST-1 1/4	1 1/4						
ESASC-B	Closed						
ESAST-1 3/8	1 3/8	**120.8**	**135.7**	**75.3**	**71.2**	**60.4**	**89.7**
ESAST-1 7/16	1 7/16	4 3/4	5 11/32	2 31/32	2 13/16	2 3/8	3 17/32
ESAST-35MME	**35MM**						
ESASC-C	Closed						
ESAST-1 1/2	1 1/2						
ESAST-1 5/8	1 5/8	**119.9**	**143.7**	**83.7**	**79.7**	**60.0**	**103.6**
ESAST-1 11/16	1 11/16	4 23/32	5 21/32	3 5/16	3 1/8	2 3/8	4 1/16
ESAST-40MME	**40MM**						
ESASC-D	Closed						
ESAST-1 3/4	1 3/4						
ESAST-1 7/8	1 7/8						
ESAST-1 15/16	1 15/16	**124.3**	**148.0**	**85.9**	**81.8**	**62.1**	**103.6**
ESAST-2	2	4 29/32	5 13/16	3 3/8	3 7/32	2 7/16	4 1/16
ESAST-45MME	**45MM**						
ESAST-50MME	**50MM**						
ESASC-E	Closed						
ESAST-2 3/16	2 3/16	**139.6**	**157.1**	**87.3**	**83.2**	**69.8**	**116.0**
ESAST-55MME	**55MM**	5 1/2	6 3/16	3 7/16	3 9/32	2 3/4	4 9/16
ESASC-F	Closed						
ESAST-2 1/4	2 1/4						
ESAST-2 7/16	2 7/16	**131.5**	**153.4**	**87.7**	**83.6**	**65.8**	**132.1**
ESAST-2 1/2	2 1/2	5 3/16	6 1/32	-	3 9/32	2 19/32	5 3/16
ESAST-60MME	**60MM**						
ESAST-65MME	**65MM**						

SELF ALIGNING SECONDARY COVERS

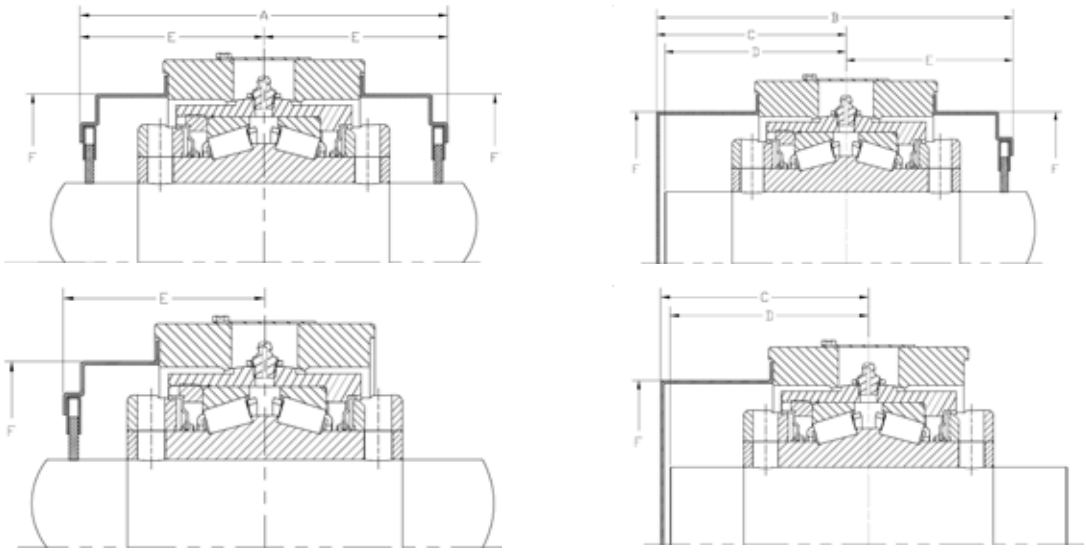

Cover Part Number	Shaft Dia.	Steel Cover Dimension					
		A	B	C	D	E	F
ESASC-G	Closed						
ESAST-2 11/16	2 11/16						
ESAST-2 3/4	2 3/4	**164.3**	**187.5**	**105.3**	**101.3**	**82.2**	**139.5**
ESAST-3	3	6 15/32	7 3/8	4 5/32	4	3 1/4	5 1/2
ESAST-70MM	**70MM**						
ESAST-75MM	**75MM**						
ESASC-H	Closed						
ESAST-3 3/16	3 3/16						
ESAST-3 1/4	3 1/4						
ESAST-3 7/16	3 7/16	**186.4**	**199.1**	**105.9**	**101.9**	**93.2**	**171.5**
ESAST-3 1/2	3 1/2	7 11/32	7 13/16	4 5/32	4	3 21/32	6 3/4
ESAST-80MME	**80MM**						
ESAST-85MME	**85MM**						
ESAST-90MME	**90MM**						
ESASC-I	Closed						
ESAST-3 15/16	3 15/16	**205.2**	**218.3**	**115.1**	**111.3**	**102.4**	**186.9**
ESAST-4	4	8 3/32	8 19/32	4 17/32	4 3/8	4 1/32	7 3/8
ESAST-100MME	**100MM**						
ESASC-J	Closed						
ESAST-4 7/16	4 7/16						
ESAST-4 1/2	4 1/2	**236.0**	**259.6**	**115.9**	**137.3**	**118.0**	**208.8**
ESAST-110MM	**110MM**	9 9/32	10 7/32	4 9/16	5 13/32	4 21/32	8 8/32
ESAST-115MM	**115MM**						
ESASC-K	Closed						
ESAST-4 15/16	4 15/16	**253.4**	**266.4**	**139.7**	**135.7**	**126.7**	**239.5**
ESAST-5	5	9 31/32	10 1/2	5 1/2	5 11/32	5	9 7/16
ESAST-125MM	**125MM**						

SELF-ALIGNING INTERCHANGE

Pillow Block

Dodge Part Number*	SealMaster Part Number*			TIMKEN		
Assembled Unit	Assembled Unit	Assembled Unit Single Collar	Cast Steel Housings	Assembled Unit*	Optional Secondary Sealing Covers - OPEN	Optional Secondary Sealing Covers - CLOSED
P2B-EXL-103-R	RPB-103-2			ESA-P2B-TRB-1 3/16	ESAST-1 3/16	ESASC-A
P2B-EXL-104-R	RPB-104-2			ESA-P2B-TRB-1 1/4	ESAST-1 1/4	ESASC-A
P2B-EXL-106-R	RPB-106-2			ESA-P2B-TRB-1 3/8	ESAST-1 3/8	ESASC-B
P2B-EXL-107-R	RPB-107-2			ESA-P2B-TRB-1 7/16	ESAST-1 7/16	ESASC-B
P2B-EXL-108-R	RPB-108-2		SPB-108-2	ESA-P2B-TRB-1 1/2	ESAST-1 1/2	ESASC-C
P2B-EXL-110-R	RPB-110-2		SPB-110-2	ESA-P2B-TRB-1 5/8	ESAST-1 5/8	ESASC-C
P2B-EXL-111-R	RPB-111-2		SPB-111-2	ESA-P2B-TRB-1 11/16	ESAST-1 11/16	ESASC-C
P2B-EXL-112-R	RPB-112-2	RPBA-112-2	SPB-112-2	ESA-P2B-TRB-1 3/4	ESAST-1 3/4	ESASC-D
P2B-EXL-114-R	RPB-114-2	RPBA-114-2	SPB-114-2	ESA-P2B-TRB-1 7/8	ESAST-1 7/8	ESASC-D
P2B-EXL-115-R	RPB-115-2	RPBA-115-2	SPB-115-2	ESA-P2B-TRB-1 15/16	ESAST-1 15/16	ESASC-D
P2B-EXL-200-R	RPB-200-2	RPBA-200-2	SPB-200-2	ESA-P2B-TRB-2	ESAST-2	ESASC-D
P2B-EXL-203-R	RPB-203-2	RPBA-203-2	SPB-203-2	ESA-P2B-TRB-2 3/16	ESAST-2 3/16	ESASC-E
P2B-EXL-204-R	RPB-204-2	RPBA-204-2	SPB-204-2	ESA-P2B-TRB-2 1/4	ESAST-2 1/4	ESASC-F
P2B-EXL-207-R	RPB-207-2	RPBA-207-2	SPB-207-2	ESA-P2B-TRB-2 7/16	ESAST-2 7/16	ESASC-F
P2B-EXL-208-R	RPB-208-2	RPBA-208-2	SPB-208-2	ESA-P2B-TRB-2 1/2	ESAST-2 1/2	ESASC-F
P2B-EXL-211-R	RPB-211-2	RPBA-211-2	SPB-211-2	ESA-P2B-TRB-2 11/16	ESAST-2 11/16	ESASC-G
P2B-EXL-212-R	RPB-212-2	RPBA-212-2	SPB-212-2	ESA-P2B-TRB-2 3/4	ESAST-2 3/4	ESASC-G
P2B-EXL-215-R	RPB-215-2	RPBA-215-2	SPB-215-2	ESA-P2B-TRB-2 15/16	ESAST-2 15/16	ESASC-G
P2B-EXL-300-R	RPB-300-2	RPBA-300-2	SPB-300-2	ESA-P2B-TRB-3	ESAST-3	ESASC-G
P2B-EXL-303-R	RPB-303-2	RPBA-303-2	SPB-303-2	ESA-P2B-TRB-3 3/16	ESAST-3 3/16	ESASC-H
P2B-EXL-304-R	RPB-304-2	RPBA-304-2	SPB-304-2	ESA-P2B-TRB-3 1/4	ESAST-3 1/4	ESASC-H
P2B-EXL-307-R	RPB-307-2	RPBA-307-2	SPB-307-2	ESA-P2B-TRB-3 7/16	ESAST-3 7/16	ESASC-H
P2B-EXL-308-R	RPB-308-2	RPBA-308-2	SPB-308-2	ESA-P2B-TRB-3 1/2	ESAST-3 1/2	ESASC-H
P4B-EXL-204-R	RPB-204-4	RPBA-204-4		ESA-P4B-TRB-2 1/4	ESAST-2 1/4	ESASC-F
P4B-EXL-207-R	RPB-207-4	RPBA-207-4		ESA-P4B-TRB-2 7/16	ESAST-2 7/16	ESASC-F
P4B-EXL-208-R	RPB-208-4	RPBA-208-4		ESA-P4B-TRB-2 1/2	ESAST-2 1/2	ESASC-F
P4B-EXL-211-R	RPB-211-4	RPBA-211-4		ESA-P4B-TRB-2 11/16	ESAST-2 11/16	ESASC-G
P4B-EXL-212-R	RPB-212-4	RPBA-212-4		ESA-P4B-TRB-2 3/4	ESAST-2 3/4	ESASC-G
P4B-EXL-215-R	RPB-215-4	RPBA-215-4		ESA-P4B-TRB-2 15/16	ESAST-2 15/16	ESASC-G
P4B-EXL-300-R	RPB-300-4	RPBA-300-4		ESA-P4B-TRB-3	ESAST-3	ESASC-G
P4B-EXL-303-R	RPB-303-4	RPBA-303-4		ESA-P4B-TRB-3 3/16	ESAST-3 3/16	ESASC-H
P4B-EXL-304-R	RPB-304-4	RPBA-304-4		ESA-P4B-TRB-3 1/4	ESAST-3 1/4	ESASC-H
P4B-EXL-307-R	RPB-307-4	RPBA-307-4		ESA-P4B-TRB-3 7/16	ESAST-3 7/16	ESASC-H
P4B-EXL-308-R	RPB-308-4	RPBA-308-4		ESA-P4B-TRB-3 1/2	ESAST-3 1/2	ESASC-H
P4B-EXL-315-R	RPB-315-4	RPBA-315-4	SPB-315-4	ESA-P4B-TRB-3 15/16	ESAST-3 15/16	ESASC-I
P4B-EXL-400-R	RPB-400-4		SPB-400-4	ESA-P4B-TRB-4	ESAST-4	ESASC-I
P4B-EXL-407-R	RPB-407-4		SPB-407-4	ESA-P4B-TRB-4 7/16	ESAST-4 7/16	ESASC-J
P4B-EXL-408-R	RPB-408-4		SPB-408-4	ESA-P4B-TRB-4 1/2	ESAST-4 1/2	ESASC-J
P4B-EXL-415-R	RPB-415-4		SPB-415-4	ESA-P4B-TRB-4 15/16	ESAST-4 15/16	ESASC-K
P4B-EXL-500-R	RPB-500-4		SPB-500-4	ESA-P4B-TRB-5	ESAST-5	ESASC-K

*Available in expansion and non-expansion type bearings

Note: SealMaster single collar has shorter length thru-bore than the Timken double collar.

SELF-ALIGNING INTERCHANGE

Four-Bolt Flange Block

SealMaster Part Number*		TIMKEN		
COMPLETE Double Collar	COMPLETE Single Collar	Assembled Unit*	Steel Open End Cover	Steel Closed End Cover
RFB-103	RFB-A-103	ESA-4BF-TRB-1 3/16	ESAST-1 3/16	ESASC-A
RFB-104	RFB-A-104	ESA-4BF-TRB-1 1/4	ESAST-1 1/4	ESASC-A
RFB-106	RFB-A-106	ESA-4BF-TRB-1 3/8	ESAST-1 7/16	ESASC-B
RFB-107	RFB-A-107	ESA-4BF-TRB-1 7/16	ESAS T-1 7/16	ESASC-B
RFB-108	RFB-A-108	ESA-4BF-TRB-1 1/2	ESAST-1 1/2	ESASC-C
RFB-110	RFB-A-110	ESA-4BF-TRB-1 5/8	ESAST-1 5/8	ESASC-C
RFB-111	RFB-A-111	ESA-4BF-TRB-1 11/16	ESAST-1 11/16	ESASC-C
RFB-112	RFB-A-112	ESA-4BF-TRB-1 3/4	ESAST-1 3/4	ESASC-D
RFB-115	RFB-A-115	ESA-4BF-TRB-1 15/16	ESAST-1 15/16	ESASC-D
RFB-200	RFB-A-200	ESA-4BF-TRB-1-2	ESAST-2	ESASC-D
RFB-203	RFB-A-203	ESA-4BF-TRB-2 3/16	ESAST-2 3/16	ESASC-E
RFB-204	RFB-A-204	ESA-4BF-TRB-2 1/4	ESAST-2 1/4	ESASC-F
RFB-207	RFB-A-207	ESA-4BF-TRB-2 7/16	ESAST-2 7/16	ESASC-F
RFB-208	RFB-A-208	ESA-4BF-TRB-2 1/2	ESAST-2 1/2	ESASC-F
RFB-211	RFB-A-211	ESA-4BF-TRB-2 11/16	ESAST-2 11/16	ESASC-G
RFB-212	RFB-A-212	ESA-4BF-TRB-2 3/4	ESAST-2 3/4	ESASC-G
RFB-215	RFB-A-215	ESA-4BF-TRB-2 15/16	ESAST-2 15/16	ESASC-G
RFB-300	RFB-A-300	ESA-4BF-TRB-3	ESAST-3	ESASC-G
RFB-303	RFB-A-303	ESA-4BF-TRB-3 3/16	ESAST-3 3/16	ESASC-H
RFB-307	RFB-A-307	ESA-4BF-TRB-3 7/16	ESAST-3 7/16	ESASC-H
RFB-308	RFB-A-308	ESA-4BF-TRB-3 1/2	ESAST-3 1/2	ESASC-H
RFB-315	RFB-A-315	ESA-4BF-TRB-3 15/16	ESAST-3 15/16	ESASC-I
RFB-400	RFB-A-400	ESA-4BF-TRB-4	ESAST-4	ESASC-I

*Available in expansion and non-expansion type bearings

Note: SealMaster single collar has shorter length thru-bore than the Timken double collar.

08-24 Order No. 11266 POD | Timken® is a registered trademark of The Timken Company. | © 2024 The Timken Company | Printed in U.S.A.
All other trademarks are the property of their respective owners.

Call on Timken

For your nearest Timken sales representative, visit www.timken.com.

TIMKEN

The Timken team applies their know-how to improve the reliability and performance of machinery in diverse markets worldwide. The company designs, makes and markets bearings, gear drives, automated lubrication systems, belts, brakes, clutches, chain, couplings, linear motion products and related industrial motion rebuild and repair services.

Stronger. By Design.

www.timken.com